INVITATION TO BID

The Business Department on behalf of the Board of Education of the Town of Old Saybrook, Connecticut are seeking SEALED Bids from interested individuals, firms or consultant teams to provide furnish all labor, materials, equipment, and supervision necessary to complete the installation as specified in the project documents for the **Goodwin Phase II HVAC bid #27-001**. Work includes, but is not limited to, the supply and installation of eight (8) VRF fan coil units, three (3) VRF condensers, one (1) heat pump rooftop unit (RTU), one (1) new main distribution power panel, ductwork, piping, insulation, pumps, power and controls wiring, and associated controls integration into the existing building management system at the Kathleen E. Goodwin Elementary Schools, located at 80 Old Boston Post Road, Old Saybrook, CT 06475. **The project start date on site will be June 18, 2027, and substantial completion including balancing by August 20, 2027.** A walkthrough will take place at **1:30 pm** on **Tuesday, November 3, 2026**, at Kathleen E. Goodwin Elementary School, 80 Old Boston Post Road, Old Saybrook, CT 06475. Sealed Bids marked **Goodwin School Phase II HVAC bid #27-001** will be received until 10:00 AM on November 16, 2026, at the Board of Education Office located at 50 Sheffield Street, Old Saybrook, Connecticut 06475, at which time they will be publicly opened and read aloud. Each bidder must provide two (2) hard copies of full bid packages. Original bid package and related addenda can be found online: https://www.oldsaybrookschools.org/documents/business-documents/bids/626770
Due to State regulations, this is a Prevailing Wage project.

The Old Saybrook Board of Education reserves the right to waive any informalities, irregularities or defects in bids, to reject any and all bids and to accept a bid that, in its' sole discretion, is in the best interest of the Board. Questions regarding the project should be addressed to: Pamela Listorti, Director of Finance, Facilities and Human Resources. Email: plistorti@oldsaybrookschools.org. Office Phone: 860-395-3158 x3016

INFORMATION FOR BIDDERS

Project Identification

Project Name: Goodwin School Phase II HVAC Bid #27-001

Project Location: 80 Old Boston Post Road
Old Saybrook, CT 06475

Owner: Old Saybrook Board of Education/Town of Old Saybrook, Connecticut

Address: Old Saybrook Schools
50 Sheffield Street
Old Saybrook, Connecticut 06475

Scope of Work

Old Saybrook Public Schools is seeking bids for HVAC upgrades to two (2) classrooms, three (3) offices, the main entry lobby, cafeteria, and gymnasium.

The contractor shall furnish all labor, materials, equipment, and supervision necessary to complete the installation as specified in the project documents. Work includes, but is not limited to, the supply and installation of eight (8) VRF fan coil units, three (3) VRF condensers, one (1) heat pump rooftop unit (RTU), one (1) new main distribution power panel, ductwork, piping, insulation, pumps, power and controls wiring, and associated controls integration into the existing building management system. Details are outlined in the attached Goodwin Phase II HVAC Specifications and the Goodwin Phase II HVAC Design – Full Set Plans and Schedules

Details

Bids will be received for a single prime Contract. Submitted bids shall include the Bid Form.

The project will be start on site June 18, 2027, and substantial completion including balancing by August 20, 2027.

The Issuing Office is: Old Saybrook Public Schools Business Office, 50 Sheffield Street, Old Saybrook, Connecticut (860-395-3158 x3016). Prospective Bidders may examine the Bidding Documents at https://www.oldsaybrookschools.org/documents/business-documents/bids/626770 and may obtain electronic copies of the Bidding Documents from the Issuing Office

The successful Bidder will be required to provide a Performance Bond in the amount of one hundred percent of the Contract Price if requested. The Surety Company shall be licensed in the State of Connecticut and listed on IRS Department Circular 570. A Payment Bond will not be required unless Contract amount is equal to or greater than $100,000.

The successful Bidder shall comply with the requirements of Prevailing Wage Rate Laws in accordance with Section 31-53 of the Connecticut General Statues. (see Appendix A)

The successful Bidder shall provide insurance appropriate levels of insurance coverage. (see Appendix B)

All bids must include a Non-Collusion Affidavit. (see Appendix C)

The Owner is exempt from payment of the Sales and Use Tax on all materials and equipment to be incorporated with the work. Taxes shall not be included in the bid.

The bidder agrees that its bid shall be good, capable of being accepted, and may not be withdrawn for a period of thirty [30] days, Saturdays, Sundays and legal holidays excluded, after the opening of bids.

Old Saybrook Public Schools reserves the right to waive any technical defects in the bids; to reject bids which do not conform to the terms and conditions described in the specifications; to reject any, any part of, or all bids; to waive informalities or irregularities in the bidding process; and to accept that bid which Old Saybrook Public Schools deems to be in its best interest, whether or not it is the lowest dollar proposed. All work to be performed in connection with the proposed project will be subject to all applicable federal, state, and local laws, ordinances and regulations.

If Old Saybrook Public Schools determines, in its sole discretion, to proceed with the work, the successful bidder must execute and deliver the Contract for Construction of a Small Project and furnish a valid Certificate of Insurance with full policies, a Performance Bond, and Payment Bond if applicable, to Old Saybrook Public Schools prior to the start of any work.

It is the responsibility of the bidder to ensure that it has received any and all addendums to this Invitation to Bid prior to submitting a bid.

This Invitation to Bid is not binding on Old Saybrook Public Schools.

Old Saybrook Public Schools reserves the right to revise or amend the plans and specifications from time to time as it deems necessary.

This Invitation to Bid has been prepared solely to solicit bids and does not constitute a contract offer

Old Saybrook Public Schools reserves the right to amend, cancel, postpone, withdraw, or resubmit this Invitation for Bid at any time if it is in the best interest of Old Saybrook Public Schools to do so.

Old Saybrook Public Schools is an Affirmative Action/Equal Opportunity Employer. Minority/Women Business Enterprises are encouraged to apply.

Owner: Old Saybrook Public Schools By: Pamela Listorti, Director of Finance, Facilities & Human Resources
Date: October 6, 2026

BID SPECIFICATION GOODWIN PHASE II HVAC #27-001

BID PRICING SUBMITTAL

TOTAL PROJECT COST _____

Minimum Rates and Classifications
for Building Construction

ID#: 26-11368

Connecticut Department of Labor
Wage and Workplace Standards Division

By virtue of the authority vested in the Labor Commissioner under provisions of Section 31-53 of the General Statutes of Connecticut, as amended, the following are declared to be the prevailing rates and welfare payments and will apply only where the contract is advertised for bid within 20 days of the date on which the rates are established. Any contractor or subcontractor not obligated by agreement to pay to the welfare and pension fund shall pay this amount to each employee as part of his/her hourly wages.

Project Number: Project Town: Old Saybrook
State#: FAP#:
Project: Goodwin Elementary School: Phase II HVAC

CLASSIFICATION	Hourly Rate	Benefits
1b) Asbestos/Toxic Waste Removal Laborers: Asbestos removal and encapsulation (except its removal from mechanical systems which are not to be scrapped), toxic waste removers, blasters.**See Laborers Group 7**		
1c) Asbestos Worker/Heat and Frost Insulator	50.16	35.30
2) Boilermaker	50.21	30.01
3a) Bricklayer, Cement Mason, Concrete Finisher (including caulking), Stone Masons	45.76	37.42 + a
3b) Tile Setter	43.0	34.75
3c) Tile and Stone Finishers	36.0	29.43
3d) Marble & Terrazzo Finishers	35.7	29.73
3e) Plasterer	44.52	29.63

As of: October 8, 2026

3f) Terrazzo Mechanics & Marble Setters	40.6	39.93
------LABORERS------		
4) Group 1: General laborers, carpenter tenders, concrete specialists, wrecking laborers and fire watchers.	37.0	30.47
4) Group 1a: Acetylene Burners (Hours worked with a torch)	38.0	30.47
4a) Group 2: Mortar mixers, plaster tender, power buggy operators, powdermen, fireproofer/mixer/nozzleman (Person running mixer and spraying fireproof only).	37.25	30.47
4b) Group 3: Jackhammer operators/pavement breaker, mason tender (brick), mason tender (cement/concrete), forklift operators and forklift operators (masonry).	37.5	30.47
4c) **Group 4: Pipelayers: Licensed P6 -P7 (one or two employees of the total crew who primary task is to perform mating of pipe sections).	38.0	30.47
4d) Group 5: Air track operator, sand blaster and hydraulic drills.	37.75	30.47
4e) Group 6: Blasters, nuclear and toxic waste removal.	40.0	30.47
4f) Group 7: Asbestos/lead removal and encapsulation (except it's removal from mechanical systems which are not to be scrapped).	40.0	30.47
4g) Group 8: Bottom men on open air caisson, cylindrical work and boring crew.	37.5	30.47
4h) Group 9: Top men on open air caisson, cylindrical work and boring crew.	37.0	30.47

4i) Group 10: Traffic Control Signalman	22.2	30.47
4j) Group 11: Toxic Waste Removers A or B With PPE	40.0	30.47
5) Carpenter, Acoustical Ceiling Installation, Soft Floor/Carpet Laying, Metal Stud Installation, Form Work and Scaffold Building, Drywall Hanging, Modular-Furniture Systems Installers, Lathers, Piledrivers, Resilient Floor Layers.	44.48	29.74
5a) Millwrights	45.14	30.24
5b) Carpenter - Welder	44.98	29.74
5c) Carpenter: Working with creosote lumber or acid	45.48	29.74
6) Electrical Worker (including low voltage wiring) (Trade License required: E1,2 L-5,6 C-5,6 T-1,2 L-1,2 V-1,2,7,8,9)	49.0	38.31+3% of gross wage
7a) Elevator Mechanic (Trade License required: R-1,2,5,6)	69.55	38.985+a+b
-----OUTSIDE LINE CONSTRUCTION----		
Groundman	33.41	14.50
Linemen/Cable Splicer	60.74	35.03
8) Glazier (Trade License required: FG-1,2)	44.73	27.65+ a

As of: October 8, 2026

9) Ironworker, Ornamental, Reinforcing, Structural, and Precast Concrete Erection	45.25	46.62 + a
----OPERATORS----		
Group 1: Crane Handling or Erecting Structural Steel or Stone, Hoisting Engineer (2 drums or over), Deep Shaft over 14". (Trade License Required)	60.66	30.95 + a
Group 1a: Front End Loader (7 cubic yards or over); Work Boat 26 ft. and Over	55.6	30.95 + a
Group 2: Cranes (100 ton rate capacity and over). (Trade License Required)	60.24	30.95 + a
Group 2a: Cranes (under 100 ton rated capacity), Magni Type-360 Rotating Forklift.	59.2	30.95 + a
Group 2b: Excavator over 2 cubic yards; Pile Driver ($3.00 premium when operator controls hammer), HF-1 Forklift, Drills with self contained power units, Micropile up to 14 inches helical pile.	55.17	30.95 + a
Group 3: Excavator; Gradall; Master Mechanic; Hoisting Engineer (all types of equipment where a drum and cable are used to hoist or drag material regardless of motive power of operation), Rubber Tire Excavator (Drott-1085 or similar);Grader Operator; Bulldozer Finegrade. (slopes, shaping, laser or GPS, etc.). (Trade License Required)	54.13	30.95 + a
Group 4: Trenching Machines; Lighter Derrick; CMI Machine or Similar; Koehring Loader (Skooper); Goldhofer.	53.61	30.95 + a
Group 5: Specialty Railroad Equipment; Asphalt Spreader, Asphalt Reclaiming Machine; Line Grinder; Concrete Pumps; Drills with Self Contained Power Units; Boring Machine; Post Hole Digger; Auger; Pounder; Well Digger; Milling Machine (over 24 mandrel).	52.78	30.95 + a
Group 5 continued: Side Boom; Combination Hoe and Loader; Directional Driller, Geothermal Drill.	52.78	30.95 + a

Group 6: Front End Loader (3 up to 7 cubic yards); Bulldozer (rough grade dozer).	52.35	30.95 + a
Group 7: Asphalt Roller; Concrete Saws and Cutters (ride on types); Vermeer Concrete Cutter; Stump Grinder; Scraper; Snooper; Skidder; Milling Machine (24" and under mandrel).	51.89	30.95 + a
Group 8: Mechanic; Grease Truck Operator; Hydroblaster; Barrier Mover; Power Stone Spreader; Welding; Work Boat Under 26 ft.; Transfer Machine; Rigger Foreman.	51.34	30.95 + a
Group 9: Front End Loader (under 3 cubic yards); Skid Steer Loader regardless of attachments; (Bobcat or Similar); Forklift, Power Chipper; Landscape Equipment (including Hydroseeder); Vacuum Excavation Truck and Hydrovac Excavation Truck (27 HG pressure or greater).	50.74	30.95 + a
Group 10: Vibratory hammer; ice machine; diesel and air, hammer, etc.	47.91	30.95 + a
Group 11: Conveyor, earth roller, power pavement breaker (whiphammer), robot demolition equipment.	47.91	30.95 + a
Group 12: Wellpoint Operator.	47.82	30.95 + a
Group 13: Compressor Battery Operator.	47.04	30.95 + a
Group 14: Elevator Operator; Tow Motor Operator (solid tire no rough terrain).	45.45	30.95 + a
Group 15: Generator Operator; Compressor Operator; Pump Operator; Welding Machine Operator; Heater Operator.	44.89	30.95 + a
Group 16: Maintenance Engineer and Articulating End Dump.	43.99	30.95 + a

As of: October 8, 2026

Group 17: Portable Asphalt Plant Operator; Portable Crusher Plant Operator; Portable Concrete Plant Operator; Portable Grout Plant Operator; Portable Water Filtration Plant Operator.	49.95	30.95 + a
Group 18: Power Safety Boat; Vacuum Truck; Zim Mixer; Sweeper; (Minimum for any job requiring a CDL license); Rigger; Signalman.	46.6	30.95 + a
Surveyor: Chief of Party	50.21	30.95 + a
Surveyor: Assistant Chief of Party	46.3	30.95 + a
Surveyor: Instrument Man	44.55	30.95 + a
Surveyor: Rodman or Chainman	38.34	30.95 + a
------PAINTERS (Including Drywall Finishing)------		
10a) Brush and Roller	41.17	27.65
10b) Taping Only/Drywall Finishing	41.92	27.65
10c) Paperhanger and Red Label	41.67	27.65
10d) Spray	44.17	27.65
10e) Spray Helper	42.17	27.65
10f) Blast	46.17	27.65

10g) Blast Helper	42.17	27.65
11) Plumber (excluding HVAC pipe installation) (Trade License required: P-1,2,6,7,8,9 J-1,2,3,4 SP-1,2)	52.08	36.80
12) Well Digger, Pile Testing Machine	37.26	24.05 + a
13) Roofer (composition)	45.85	23.99
14) Roofer (slate & tile)	46.35	23.99
15) Sheetmetal Worker (Trade License required for HVAC and Ductwork: SM-1,SM-2,SM-3,SM-4,SM-5,SM-6)	46.53	45.08
16) Pipefitter (Including HVAC work) (Trade License required: S-1,2,3,4,5,6,7,8 B-1,2,3,4 D-1,2,3,4, G-1, G-2, G-8 & G-9)	52.08	36.80
------TRUCK DRIVERS------		
17) Block Truck	39.98	33.00 + a
17a) 2 Axle	38.66	33.00 + a
17ab) Helpers	36.16	33.00 + a
17b) 3 Axle, 2 Axle Mixer	38.77	33.00 + a
17c) 3 Axle Mixer	38.83	33.00 + a

As of: October 8, 2026

17d) 4 Axle	38.89	33.00 + a
17e) 4 Axle Mixer	40.69	33.00 + a
17ef) 5 Axle	38.89	33.00 + a
17eg) 5 Axle Mixer	40.69	33.00 + a
17f) Heavy Duty Trailer (40 Tons and Over)	41.16	33.00 + a
17g) Euclids and Semi-Trailer	38.94	33.00 + a
17h) Heavy Duty Trailer up to 40 tons	39.89	33.00 + a
17i) Snorkle Truck	39.04	33.00 + a
17j) Swivel Dump and Tack Truck	38.89	33.00 + a
18) Sprinkler Fitter (Trade License required: F-1,2,3,4)	56.78	35.24 + a
19) Theatrical Stage Journeyman	25.76	7.34

Welders: Rate for craft to which welding is incidental.
Surveyors: Hazardous material removal: $3.00 per hour premium.
*Note: Hazardous waste removal work receives additional $1.25 per hour for truck drivers.
**Note: Hazardous waste premium $3.00 per hour over classified rate.
Truck Drivers: Trainers Premium: $3.00 over wage rate.
Truck Drivers: Night Premium - Mixer Drivers: $2.00 over wage rate.

As of: October 8, 2026

Crane with 150 ft. boom (including jib) - $1.50 extra
Crane with 200 ft. boom (including jib) - $2.50 extra
Crane with 250 ft. boom (including jib) - $5.00 extra
Crane with 300 ft. boom (including jib) - $7.00 extra
Crane with 400 ft. boom (including jib) - $10.00 extra

All classifications that indicate a percentage of the fringe benefits must be calculated at the percentage rate times the "base hourly rate".

Apprentices duly registered under the Commissioner of Labor's regulations on "Work Training Standards for Apprenticeship and Training Programs" Section 31-51-d-1 to 12, are allowed to be paid the appropriate percentage of the prevailing journeymen hourly base and the full fringe benefit rate, providing the work site ratio shall not be less than one full-time journeyperson instructing and supervising the work of each apprentice in a specific trade.

The Prevailing wage rates applicable to this project are subject to annual adjustments each July 1st for the duration of the project.
Each contractor shall pay the annual adjusted prevailing wage rate that is in effect each July 1st, as posted by the Department of Labor.
It is the contractor's responsibility to obtain the annual adjusted prevailing wage rate increases directly from the Department of Labor's website.
The annual adjustments will be posted on the Department of Labor's Web page: www.ct.gov/dol. For those without internet access, please contact the division listed below.
The Department of Labor will continue to issue the initial prevailing wage rate schedule to the Contracting Agency for the project.
All subsequent annual adjustments will be posted on our Web Site for contractor access.
Contracting Agencies are under no obligation pursuant to State labor law to pay any increase due to the annual adjustment provision.

Effective October 1, 2005 - Public Act 05-50: any person performing the work of any mechanic, laborer, or worker shall be paid prevailing wage

All Person who perform work ON SITE must be paid prevailing wage for the appropriate mechanic, laborer, or worker classification.

All certified payrolls must list the hours worked and wages paid to All Persons who perform work ON SITE regardless of their ownership i.e.: (Owners, Corporate Officers, LLC Members, Independent Contractors, et. al)

Reporting and payment of wages is required regardless of any contractual relationship alleged to exist between the contractor and such person.

~~Unlisted classifications needed for work not included within the scope of the classifications listed may be added after award only as provided in the labor standards contract clause (29 CFR 5.5 (a) (1) (ii)).

Please direct any questions which you may have pertaining to classification of work and payment of prevailing wages to the Wage and Workplace Standards Division, telephone (860)263-6790.

As of: October 8, 2026

Appendix B

INSURANCE REQUIREMENTS

The respondent and the respondent's consultants shall agree to always maintain in force during the contract the following minimum coverages and shall name Town of Old Saybrook, the Old Saybrook Board of Education, the Kathleen E. Goodwin School, boards and commissions, officers, agents, servants, members, employees and volunteers as Additional Insured on a primary and non- contributory basis to all policies except Workers Compensation and Professional Liability. All policies should also include a Waiver of Subrogation in favor of the additional insureds. Insurance shall be written with Carriers approved in the State of Connecticut and with a minimum AM Best's Rating of "A-" VIII.

		(Minimum Limits)
General Liability	Each Occurrence	$1,000,000
	General Aggregate	$2,000,000
	Products/Completed Operations Aggregate	$2,000,000
Auto Liability (includes all owned, hired & non owned autos)	Combined Single Limit Each Accident	$1,000,000
Professional Liability	Per Claim	$5,000,000
	Aggregate	$5,000,000
Umbrella (Excess Liability)	Each Occurrence	$5,000,000
	Aggregate	$5,000,000

If any policy is written on a "Claims Made" basis, the policy must be continually renewed for a minimum of two (2) years from the completion date of this contract. If the policy is replaced and/or the retroactive date is changed, then the expiring policy must be endorsed to extend the reporting period for claims for the policy in effect during the contract for three (3) years from the completion date.

Workers' Compensation and Employers' Liability	WC Statutory Limits	
	EL Each Accident	$500,000
	EL Disease Each Employee	$500,000
	EL Disease Policy Limit	$500,000

Original, completed Certificates of Insurance must be presented to the Old Saybrook Board of Education prior to contract issuance. Contractor agrees to provide

replacement/renewal certificates at least 30 days prior to the expiration date of the policies. Should any of the above-described policies be cancelled, limits reduced, or coverage altered, 10 days written notice must be given to the Town.

Appendix C

NON-COLLUSION
AFFIDAVIT

State of .....

ss

County of _____ being first duly sworn, deposes and says:

1. That he/she/they/them is a ( ) Partner; ( ) Officer; ( ) Member; ( ) Owner of the firm of:

_____
the party making the foregoing proposal or bid;

2. He/she is fully informed respecting the preparation and contents of the attached proposal or bid and all circumstances regarding the same;

3. Said proposal or bid is genuine and is not a collusive or sham proposal or bid;

4. Neither the said bidder nor any of its officers, partners, members, owners, agents, representatives, employees, or parties-in-interest, including this affiant has in any way colluded, conspired, connived or agreed, directly or indirectly, with any bidder, or person, to put in a sham bid or to refrain from bidding, and has not in any manner, directly or indirectly, sought by agreement or collusion, or communication or conference, with any person, to fix the bid price or affiance or of any other bidder, or to fix any overhead, profit or cost element of said bid price, or of that of any other bidder, or to secure any advantage against the **Old Saybrook Board of Education** or any person interested in the proposed
contract;

5. The price or prices quoted in the attached proposal or bid are fair and proper and are not tainted by any collusion, conspiracy, connivance or unlawful agreement on the part of this Bidder or any of its agents, representatives, owners, employees, or parties-in-interest, including this affiant; and

6. All statements in said proposal or bid are true.

(Signed):_____

(Title):_____

Subscribed and sworn to me
This _____day of _____,2026.

_____
Notary Public, My Commission Expires:_____

SECTION 01 20 00
PRICE AND PAYMENT PROCEDURES

PART 1 GENERAL

1.01 SECTION INCLUDES

A. Procedures for preparation and submittal of applications for progress payments.

1.02 SCHEDULE OF VALUES

A. Electronic media printout including equivalent information will be considered in lieu of standard form specified; submit draft to Engineer for approval.

B. Forms filled out by hand will not be accepted.

1.03 APPLICATIONS FOR PROGRESS PAYMENTS

A. Payment Period: Submit at intervals stipulated in the Agreement.

B. Electronic media printout including equivalent information will be considered in lieu of standard form specified; submit sample to Engineer for approval.

C. Forms filled out by hand will not be accepted.

D. Execute certification by signature of authorized officer.

E. Submit one electronic and three hard-copies of each Application for Payment.

END OF SECTION 01 20 00

This page intentionally left blank

SECTION 01 25 00
SUBSTITUTION PROCEDURES

PART 1 GENERAL

1.01 DEFINITIONS

A. Substitutions: Changes from Contract Documents requirements proposed by Contractor to materials, products, assemblies, and equipment.
   1. Substitutions for Cause: Proposed due to changed Project circumstances beyond Contractor's control.
      a. Unavailability.
      b. Regulatory changes.

PART 2 PRODUCTS - NOT USED

PART 3 EXECUTION

3.01 GENERAL REQUIREMENTS

A. A Substitution Request for products, assemblies, materials, and equipment constitutes a representation that the submitter:
   1. Has investigated proposed product and determined that it meets or exceeds the quality level of the specified product, equipment, assembly, or system.
   2. Agrees to provide the same warranty for the substitution as for the specified product.
   3. Agrees to coordinate installation and make changes to other work that may be required for the work to be complete, with no additional cost to Owner.
   4. Waives claims for additional costs or time extension that may subsequently become apparent.

B. Document each request with complete data substantiating compliance of proposed substitution with Contract Documents. Burden of proof is on proposer.

C. Content: Include information necessary for tracking the status of each Substitution Request, and information necessary to provide an actionable response.

D. Limit each request to a single proposed substitution item.

3.02 SUBSTITUTION PROCEDURES DURING CONSTRUCTION

A. Engineer will consider requests for substitutions only within 15 days after date of Agreement.

B. Substitutions will not be considered under one or more of the following circumstances:
   1. When acceptance will require revisions to Contract Documents.

3.03 RESOLUTION

A. Engineer may request additional information and documentation prior to rendering a decision. Provide this data in an expeditious manner.

B. Engineer will notify Contractor in writing of decision to accept or reject request.

3.04 ACCEPTANCE

A. Accepted substitutions change the work of the Project. They will be documented and incorporated into work of the project by Change Order, Construction Change Directive, Architectural Supplementary Instructions, or similar instruments provided for in the Conditions of the Contract.

END OF SECTION 01 25 00

This page intentionally left blank

SECTION 01 30 00
ADMINISTRATIVE REQUIREMENTS

PART 1 GENERAL

1.01 GENERAL ADMINISTRATIVE REQUIREMENTS

A. Make the following types of submittals to Engineer:
   1. Requests for Interpretation (RFI).
   2. Requests for substitution.
   3. Shop drawings, product data, and samples.
   4. Test and inspection reports.
   5. Design data.
   6. Manufacturer's instructions and field reports.
   7. Progress schedules.
   8. Coordination drawings.
   9. Correction Punch List and Final Correction Punch List for Substantial Completion.
   10. Closeout submittals.

PART 2 PRODUCTS - NOT USED

PART 3 EXECUTION

3.01 WEB-BASED PROJECT SOFTWARE SERVICE

A. Web-Based Project Software Service: Provide, administer, and use web-based project software to host and manage project communication and documentation.
   1. Include, at minimum, the following features:
      a. Project directory, including Owner, Contractor, subcontractors, Engineer, and other entities involved in the project. Include names of contact persons and contact information for each entity.
      b. Access control for each entity and for each workflow process to determine each entity's digital rights to create, modify, view, and print documents.
      c. Workflow planning, allowing customization of workflow for each project entity.
      d. Creation, logging, tracking, and notification for project communications.
      e. Procedures for viewing PDFs or similar file formats, allowing markups by each entity. Provide security features to lock markups against changes once submitted.
      f. Document management for drawings, specifications, and coordination drawings, including revision control.
   2. Provide user licenses for use by Owner, Engineer, and other entities involved in the project.
   3. Comply with the software service's current published licensing agreements.
   4. Training: Provide one-hour, web-based training session for users of software service. Further training is the responsibility of the user.
      a. Representatives of Owner are scheduled and included in this training.

3.02 ELECTRONIC DOCUMENT SUBMITTAL SERVICE

A. All documents transmitted for purposes of administration of the contract are to be in electronic (PDF) format, as appropriate to the document, and transmitted via an Internet-based submittal service that receives, logs and stores documents, provides electronic stamping and signatures, and notifies addressees via email.
   1. Besides submittals for review, information, and closeout, this procedure applies to Requests for Interpretation (RFIs), progress documentation, contract modification documents (e.g. supplementary instructions, change proposals, change orders), applications for payment, field reports and meeting minutes, Contractor's correction punchlist, and any other document any participant wishes to make part of the project record.
   2. Contractor and Engineer are required to use this service.
   3. It is Contractor's responsibility to submit documents in allowable format.

4. Users of the service need an email address, internet access, and PDF review software that includes ability to mark up and apply electronic stamps (such as Adobe Acrobat, www.adobe.com, or Bluebeam PDF Revu, www.bluebeam.com), unless such software capability is provided by the service provider.
5. Paper document transmittals will not be reviewed; emailed electronic documents will not be reviewed.
6. All other specified submittal and document transmission procedures apply, except that electronic document requirements do not apply to samples or color selection charts.

B. Submittal Service: The selected service is:

3.03 PRECONSTRUCTION MEETING

A. Schedule meeting after Notice of Award.

B. Attendance Required:
1. Owner.
2. Engineer.
3. Contractor.

C. Agenda:
1. Execution of Owner-Contractor Agreement.
2. Submission of executed bonds and insurance certificates.
3. Distribution of Contract Documents.
4. Submission of list of subcontractors, list of products, schedule of values, and progress schedule.
5. Submission of initial Submittal schedule.
6. Procedures and processing of field decisions, submittals, substitutions, applications for payments, proposal request, Change Orders, and Contract closeout procedures.
7. Scheduling.

D. Record minutes and distribute copies within two days after meeting to participants, with two copies to Engineer, Owner, participants, and those affected by decisions made.

3.04 SITE MOBILIZATION MEETING

A. Project Coordinator will schedule meeting at the Project site prior to Contractor occupancy.

B. Attendance Required:
1. Contractor.
2. Owner.
3. Contractor's superintendent.
4. Major subcontractors.

C. Agenda:
1. Use of premises by Owner and Contractor.
2. Owner's requirements.
3. Construction facilities and controls provided by Owner.
4. Temporary utilities provided by Owner.
5. Survey and building layout.
6. Security and housekeeping procedures.
7. Schedules.
8. Application for payment procedures.
9. Procedures for testing.
10. Procedures for maintaining record documents.
11. Requirements for start-up of equipment.
12. Inspection and acceptance of equipment put into service during construction period.

D. Record minutes and distribute copies within two days after meeting to participants, with two copies to Engineer, Owner, participants, and those affected by decisions made.

3.05 CONSTRUCTION PROGRESS SCHEDULE

A. Within 10 days after date of the Agreement, submit preliminary schedule defining planned operations for the first 60 days of work, with a general outline for remainder of work.

B. If preliminary schedule requires revision after review, submit revised schedule within 10 days.

C. Within 20 days after review of preliminary schedule, submit draft of proposed complete schedule for review.
   1. Include written certification that major contractors have reviewed and accepted proposed schedule.

D. Within 10 days after joint review, submit complete schedule.

E. Submit updated schedule every 14 days.

3.06 REQUESTS FOR INFORMATION (RFI)

A. Preparation: Prepare an RFI immediately upon discovery of a need for interpretation of Contract Documents. Failure to submit a RFI in a timely manner is not a legitimate cause for claiming additional costs or delays in execution of the work.
   1. Prepare a separate RFI for each specific item.
   2. Prepare using software provided by the Electronic Document Submittal Service.

B. Attachments: Include sketches, coordination drawings, descriptions, photos, submittals, and other information necessary to substantiate the reason for the request.

C. RFI Log: Prepare and maintain a tabular log of RFIs for the duration of the project.

3.07 SUBMITTAL SCHEDULE

A. Submit to Engineer for review a schedule for submittals in tabular format.

3.08 NUMBER OF COPIES OF SUBMITTALS

A. Electronic Documents: Submit one electronic copy in PDF format; an electronically-marked up file will be returned. Create PDFs at native size and right-side up; illegible files will be rejected.

3.09 SUBMITTAL PROCEDURES

A. General Requirements:
   1. Use a separate transmittal for each item.
   2. Sequentially identify each item. For revised submittals use original number and a sequential numerical suffix.
   3. Identify: Project; Contractor; subcontractor or supplier; pertinent drawing and detail number; and specification section number and article/paragraph, as appropriate on each copy.
   4. Schedule submittals to expedite the Project, and coordinate submission of related items.
      a. For sequential reviews involving Engineer's consultants, Owner, or another affected party, allow an additional 7 days.
   5. Provide space for review stamps.
   6. When revised for resubmission, identify all changes made since previous submission.
   7. Distribute reviewed submittals. Instruct parties to promptly report inability to comply with requirements.

END OF SECTION 01 30 00

This page intentionally left blank

SECTION 01 31 14
FACILITY SERVICES COORDINATION

PART 1 GENERAL

1.01 MECHANICAL AND ELECTRICAL COORDINATOR

A. Employ and pay for services of a person, technically qualified and administratively experienced in field coordination of the type of work required to be coordinated, for the duration of the Work.

PART 2 PRODUCTS - NOT USED

PART 3 EXECUTION

3.01 COORDINATION REQUIRED

A. Coordinate progress schedules, including dates for submittals and for delivery of products.

3.02 COORDINATION DOCUMENTS

A. Prepare a master schedule identifying responsibilities for activities that directly relate to this work, including submittals and temporary utilities; organize by specification section.

B. Identify electrical power characteristics and control wiring required for each item of equipment.

3.03 COORDINATION OF SUBMITTALS

A. Review shop drawings, product data, and samples for compliance with Contract Documents and for coordination with related work. Transmit copies of reviewed documents to Engineer.

B. Check field dimensions and clearances and relationship to available space and anchors.

C. Check compatibility with equipment and work of other sections, electrical characteristics, and operational control requirements.

D. Coordinate controls, interlocks, wiring of switches, and relays.

3.04 OBSERVATION OF WORK

A. Observe work for compliance with Contract Documents.

3.05 EQUIPMENT START-UP

A. Observe start-up and adjustments, test run, record time and date of start-up, and results.

3.06 INSPECTION AND ACCEPTANCE OF EQUIPMENT

A. Prior to inspection, verify that equipment is tested, operational, clean, and ready for operation.

END OF SECTION 01 31 14

This page intentionally left blank

SECTION 01 32 16
CONSTRUCTION PROGRESS SCHEDULE

PART 1 GENERAL

1.01 SUBMITTALS

A. Within 10 days after date of Agreement, submit preliminary schedule.

B. If preliminary schedule requires revision after review, submit revised schedule within 10 days.

C. Within 20 days after review of preliminary schedule, submit draft of proposed complete schedule for review.
   1. Include written certification that major contractors have reviewed and accepted proposed schedule.

D. Submit in PDF format.

PART 2 PRODUCTS - NOT USED

PART 3 EXECUTION

3.01 PRELIMINARY SCHEDULE

A. Prepare preliminary schedule in the form of a horizontal bar chart.

3.02 CONTENT

A. Show complete sequence of construction by activity, with dates for beginning and completion of each element of construction.

B. Identify each item by specification section number.

C. Show accumulated percentage of completion of each item, and total percentage of Work completed, as of the first day of each month.

D. Provide legend for symbols and abbreviations used.

3.03 REVIEW AND EVALUATION OF SCHEDULE

A. Evaluate project status to determine work behind schedule and work ahead of schedule.

B. After review, revise as necessary as result of review, and resubmit within 10 days.

3.04 UPDATING SCHEDULE

A. Maintain schedules to record actual start and finish dates of completed activities.

B. Indicate progress of each activity to date of revision, with projected completion date of each activity.

C. Annotate diagrams to graphically depict current status of Work.

D. Identify activities modified since previous submittal, major changes in Work, and other identifiable changes.

E. Indicate changes required to maintain Date of Substantial Completion.

F. Submit reports required to support recommended changes.

3.05 DISTRIBUTION OF SCHEDULE

A. Distribute copies of updated schedules to Contractor's project site file, to subcontractors, suppliers, Engineer, Owner, and other concerned parties.

B. Instruct recipients to promptly report, in writing, problems anticipated by projections indicated in schedules.

END OF SECTION 01 32 16

This page intentionally left blank

SECTION 01 35 53
SECURITY PROCEDURES

PART 1 GENERAL

1.01 SECURITY PROGRAM

A. Protect Work , existing premises and Owner's operations from theft, vandalism, and unauthorized entry.

B. Initiate program at project mobilization.

C. Maintain program throughout construction period until Owner acceptance precludes the need for Contractor security.

1.02 ENTRY CONTROL

A. Restrict entrance of persons and vehicles into Project site and existing facilities.

B. Allow entrance only to authorized persons with proper identification.

C. Contractor shall control entrance of persons and vehicles related to Owner's operations.

PART 2 PRODUCTS - NOT USED

PART 3 EXECUTION - NOT USED

END OF SECTION 01 35 53

This page intentionally left blank

SECTION 01 40 00
QUALITY REQUIREMENTS

PART 1 GENERAL

1.01 DEFINITIONS

A. Contractor's Quality Control Plan: Contractor's management plan for executing the Contract for Construction.

1.02 SUBMITTALS

A. Manufacturer's Instructions: When specified in individual specification sections, submit printed instructions for delivery, storage, assembly, installation, start-up, adjusting, and finishing, for the Owner's information. Indicate special procedures, perimeter conditions requiring special attention, and special environmental criteria required for application or installation.

1.03 REFERENCES AND STANDARDS

A. For products and workmanship specified by reference to a document or documents not included in the Project Manual, also referred to as reference standards, comply with requirements of the standard, except when more rigid requirements are specified or are required by applicable codes.

B. Comply with reference standard of date of issue current on date of Contract Documents, except where a specific date is established by applicable code.

C. Obtain copies of standards where required by product specification sections.

D. Maintain copy at project site during submittals, planning, and progress of the specific work, until Substantial Completion.

E. Should specified reference standards conflict with Contract Documents, request clarification from Engineer before proceeding.

F. Neither the contractual relationships, duties, or responsibilities of the parties in Contract nor those of Engineer shall be altered from Contract Documents by mention or inference otherwise in any reference document.

PART 2 PRODUCTS - NOT USED

PART 3 EXECUTION

3.01 CONTROL OF INSTALLATION

A. Monitor quality control over suppliers, manufacturers, products, services, site conditions, and workmanship, to produce work of specified quality.

B. Comply with manufacturers' instructions, including each step in sequence.

C. Should manufacturers' instructions conflict with Contract Documents, request clarification from Engineer before proceeding.

D. Comply with specified standards as minimum quality for the work except where more stringent tolerances, codes, or specified requirements indicate higher standards or more precise workmanship.

E. Have work performed by persons qualified to produce required and specified quality.

F. Verify that field measurements are as indicated on shop drawings or as instructed by the manufacturer.

G. Secure products in place with positive anchorage devices designed and sized to withstand stresses, vibration, physical distortion, and disfigurement.

3.02 DEFECT ASSESSMENT

A. Replace Work or portions of the Work not complying with specified requirements.

END OF SECTION 01 40 00

This page intentionally left blank

SECTION 01 42 16
DEFINITIONS

PART 1 GENERAL

1.01 SUMMARY

A. Other definitions are included in individual specification sections.

1.02 DEFINITIONS

A. Furnish: To supply, deliver, unload, and inspect for damage.

B. Install: To unpack, assemble, erect, apply, place, finish, cure, protect, clean, start up, and make ready for use.

C. Product: Material, machinery, components, equipment, fixtures, and systems forming the work result. Not materials or equipment used for preparation, fabrication, conveying, or erection and not incorporated into the work result. Products may be new, never before used, or re-used materials or equipment.

D. Provide: To furnish and install.

E. Supply: Same as Furnish.

PART 2 PRODUCTS - NOT USED

PART 3 EXECUTION - NOT USED

END OF SECTION 01 42 16

This page intentionally left blank

SECTION 01 51 00
TEMPORARY UTILITIES

PART 1 GENERAL

1.01 TEMPORARY ELECTRICITY

A. Cost: By Owner.

B. Connect to Owner's existing power service.
   1. Do not disrupt Owner's need for continuous service.

C. Complement existing power service capacity and characteristics as required.

D. Provide main service disconnect and over-current protection at convenient location and meter.

E. Permanent convenience receptacles may be utilized during construction.

F. Provide adequate distribution equipment, wiring, and outlets to provide single phase branch circuits for power and lighting.

PART 2 PRODUCTS - NOT USED

PART 3 EXECUTION - NOT USED

END OF SECTION 01 51 00

This page intentionally left blank

SECTION 01 74 19
CONSTRUCTION WASTE MANAGEMENT AND DISPOSAL

PART 1 GENERAL

1.01 WASTE MANAGEMENT REQUIREMENTS

A. Owner requires that this project generate the least amount of trash and waste possible.

B. Employ processes that ensure the generation of as little waste as possible due to error, poor planning, breakage, mishandling, contamination, or other factors.

C. Minimize trash/waste disposal in landfills; reuse, salvage, or recycle as much waste as economically feasible.

D. Methods of trash/waste disposal that are not acceptable are:
   1. Burning on the project site.
   2. Burying on the project site.
   3. Dumping or burying on other property, public or private.
   4. Other illegal dumping or burying.

E. Regulatory Requirements: Contractor is responsible for knowing and complying with regulatory requirements, including but not limited to Federal, state and local requirements, pertaining to legal disposal of all construction and demolition waste materials.

1.02 DEFINITIONS

A. Clean: Untreated and unpainted; not contaminated with oils, solvents, caulk, or the like.

B. Construction and Demolition Waste: Solid wastes typically including building materials, packaging, trash, debris, and rubble resulting from construction, remodeling, repair and demolition operations.

C. Hazardous: Exhibiting the characteristics of hazardous substances, i.e., ignitibility, corrosivity, toxicity or reactivity.

D. Nonhazardous: Exhibiting none of the characteristics of hazardous substances, i.e., ignitibility, corrosivity, toxicity, or reactivity.

E. Nontoxic: Neither immediately poisonous to humans nor poisonous after a long period of exposure.

F. Recyclable: The ability of a product or material to be recovered at the end of its life cycle and remanufactured into a new product for reuse by others.

G. Recycle: To remove a waste material from the project site to another site for remanufacture into a new product for reuse by others.

H. Recycling: The process of sorting, cleansing, treating and reconstituting solid waste and other discarded materials for the purpose of using the altered form. Recycling does not include burning, incinerating, or thermally destroying waste.

I. Return: To give back reusable items or unused products to vendors for credit.

J. Reuse: To reuse a construction waste material in some manner on the project site.

K. Salvage: To remove a waste material from the project site to another site for resale or reuse by others.

L. Sediment: Soil and other debris that has been eroded and transported by storm or well production run-off water.

M. Source Separation: The act of keeping different types of waste materials separate beginning from the first time they become waste.

N. Toxic: Poisonous to humans either immediately or after a long period of exposure.

O. Trash: Any product or material unable to be reused, returned, recycled, or salvaged.

P. Waste: Extra material or material that has reached the end of its useful life in its intended use. Waste includes salvageable, returnable, recyclable, and reusable material.

PART 3 EXECUTION

2.01 WASTE MANAGEMENT PLAN IMPLEMENTATION

A. Manager: Designate an on-site person or persons responsible for instructing workers and overseeing and documenting results of the Waste Management Plan.

B. Instruction: Provide on-site instruction of appropriate separation, handling, and recycling, salvage, reuse, and return methods to be used by all parties at the appropriate stages of the project.

C. Facilities: Provide specific facilities for separation and storage of materials for recycling, salvage, reuse, return, and trash disposal, for use by all contractors and installers.
   1. Provide containers as required.
   2. Provide adequate space for pick-up and delivery and convenience to subcontractors.
   3. Keep recycling and trash/waste bin areas neat and clean and clearly marked in order to avoid contamination of materials.

D. Hazardous Wastes: Separate, store, and dispose of hazardous wastes according to applicable regulations.

E. Recycling: Separate, store, protect, and handle at the site identified recyclable waste products in order to prevent contamination of materials and to maximize recyclability of identified materials. Arrange for timely pickups from the site or deliveries to recycling facility in order to prevent contamination of recyclable materials.

F. Reuse of Materials On-Site: Set aside, sort, and protect separated products in preparation for reuse.

G. Salvage: Set aside, sort, and protect products to be salvaged for reuse off-site.

END OF SECTION 01 74 19

SECTION 01 78 00
CLOSEOUT SUBMITTALS

PART 1 GENERAL

1.01 SECTION INCLUDES

A. Project record documents.

B. Operation and maintenance data.

C. Warranties and bonds.

1.02 SUBMITTALS

A. Project Record Documents: Submit documents to Owner with claim for final Application for Payment.

B. Operation and Maintenance Data:
   1. For equipment, or component parts of equipment put into service during construction and operated by Owner, submit completed documents within ten days after acceptance.
   2. Submit one copy of completed documents 15 days prior to final inspection. This copy will be reviewed and returned after final inspection, with Engineer comments. Revise content of all document sets as required prior to final submission.
   3. Submit two sets of revised final documents in final form within 10 days after final inspection.

C. Warranties and Bonds:
   1. For equipment or component parts of equipment put into service during construction with Owner's permission, submit documents within 10 days after acceptance.
   2. Make other submittals within 10 days after Date of Substantial Completion, prior to final Application for Payment.
   3. For items of Work for which acceptance is delayed beyond Date of Substantial Completion, submit within 10 days after acceptance, listing the date of acceptance as the beginning of the warranty period.

PART 3 EXECUTION

2.01 PROJECT RECORD DOCUMENTS

A. Maintain on site one set of the following record documents; record actual revisions to the Work:
   1. Drawings.
   2. Addenda.
   3. Change Orders and other modifications to the Contract.

B. Ensure entries are complete and accurate, enabling future reference by Owner.

C. Store record documents separate from documents used for construction.

D. Record information concurrent with construction progress.

E. Record Drawings: Legibly mark each item to record actual construction including:
   1. Field changes of dimension and detail.
   2. Details not on original Contract drawings.

2.02 OPERATION AND MAINTENANCE DATA

A. Product Data: Mark each sheet to clearly identify specific products and component parts, and data applicable to installation. Delete inapplicable information.

B. Drawings: Supplement product data to illustrate relations of component parts of equipment and systems, to show control and flow diagrams. Do not use Project Record Documents as maintenance drawings.

C. Typed Text: As required to supplement product data. Provide logical sequence of instructions for each procedure, incorporating manufacturer's instructions.

2.03 WARRANTIES AND BONDS

A. Obtain warranties and bonds, executed in duplicate by responsible Subcontractors, suppliers, and manufacturers, within 10 days after completion of the applicable item of work. Except for items put into use with Owner's permission, leave date of beginning of time of warranty until Date of Substantial completion is determined.

B. Verify that documents are in proper form, contain full information, and are notarized.

C. Co-execute submittals when required.

D. Retain warranties and bonds until time specified for submittal.

END OF SECTION 01 78 00

SECTION 01 79 00
DEMONSTRATION AND TRAINING

PART 1 GENERAL

1.01 SUMMARY

1.02 SUBMITTALS

A. Draft Training Plans: Owner will designate personnel to be trained; tailor training to needs and skill-level of attendees.
   1. Submit not less than four weeks prior to start of training.
   2. Revise and resubmit until acceptable.
   3. Provide an overall schedule showing all training sessions.
   4. Include at least the following for each training session:
      a. Identification, date, time, and duration.
      b. Description of products and/or systems to be covered.
      c. Name of firm and person conducting training; include qualifications.
      d. Intended audience, such as job description.
      e. Objectives of training and suggested methods of ensuring adequate training.
      f. Methods to be used, such as classroom lecture, live demonstrations, hands-on, etc.
      g. Media to be used, such a slides, hand-outs, etc.
      h. Training equipment required, such as projector, projection screen, etc., to be provided by Contractor.

B. Training Manuals: Provide training manual for each attendee; allow for minimum of two attendees per training session.
   1. Include applicable portion of O&M manuals.
   2. Include copies of all hand-outs, slides, overheads, video presentations, etc., that are not included in O&M manuals.
   3. Provide one extra copy of each training manual to be included with operation and maintenance data.

1.03 QUALITY ASSURANCE

A. Instructor Qualifications: Familiar with design, operation, maintenance and troubleshooting of the relevant products and systems.
   1. Provide as instructors the most qualified trainer of those contractors and/or installers who actually supplied and installed the systems and equipment.
   2. Where a single person is not familiar with all aspects, provide specialists with necessary qualifications.

PART 2 PRODUCTS - NOT USED

PART 3 EXECUTION

3.01 TRAINING - GENERAL

A. Conduct training on-site unless otherwise indicated.

B. Owner will provide classroom and seating at no cost to Contractor.

C. Do not start training until Functional Testing is complete, unless otherwise specified or approved by the Commissioning Provider.

D. Provide training in minimum two hour segments.

E. Training schedule will be subject to availability of Owner's personnel to be trained; re-schedule training sessions as required by Owner; once schedule has been approved by Owner failure to conduct sessions according to schedule will be cause for Owner to charge Contractor for personnel "show-up" time.

F. Review of Facility Policy on Operation and Maintenance Data: During training discuss:

1. The location of the O&M manuals and procedures for use and preservation; backup copies.
2. Typical contents and organization of all manuals, including explanatory information, system narratives, and product specific information.
3. Typical uses of the O&M manuals.

G. Product- and System-Specific Training:
1. Review the applicable O&M manuals.
2. For systems, provide an overview of system operation, design parameters and constraints, and operational strategies.
3. Review instructions for proper operation in all modes, including start-up, shut-down, seasonal changeover and emergency procedures, and for maintenance, including preventative maintenance.
4. Provide hands-on training on all operational modes possible and preventive maintenance.
5. Emphasize safe and proper operating requirements; discuss relevant health and safety issues and emergency procedures.
6. Discuss common troubleshooting problems and solutions.
7. Discuss any peculiarities of equipment installation or operation.
8. Discuss warranties and guarantees, including procedures necessary to avoid voiding coverage.
9. Review recommended tools and spare parts inventory suggestions of manufacturers.
10. Review spare parts and tools required to be furnished by Contractor.
11. Review spare parts suppliers and sources and procurement procedures.

H. Be prepared to answer questions raised by training attendees; if unable to answer during training session, provide written response within three days.

END OF SECTION 01 79 00

SECTION 07 84 00
FIRESTOPPING

PART 2 PRODUCTS

1.01 MATERIALS

A. Primers, Sleeves, Forms, Insulation, Packing, Stuffing, and Accessories: Provide type of materials as required for tested firestopping assembly.

1.02 FIRESTOPPING SYSTEMS

END OF SECTION 07 84 00

This page intentionally left blank

SECTION 09 91 13
EXTERIOR PAINTING

PART 1 GENERAL

1.01 DEFINITIONS

A. Comply with ASTM D16 for interpretation of terms used in this section.

1.02 SUBMITTALS

A. Product Data: Provide complete list of products to be used, with the following information for each:
   1. Manufacturer's name, product name and/or catalog number, and general product category (e.g. "alkyd enamel").
   2. MPI product number (e.g. MPI #47).
   3. Cross-reference to specified paint system(s) product is to be used in; include description of each system.

B. Manufacturer's Instructions: Indicate special surface preparation procedures.

C. Maintenance Data: Submit data including finish schedule showing where each product/color/finish was used, product technical data sheets, material safety data sheets (MSDS), care and cleaning instructions, touch-up procedures, repair of painted and finished surfaces, and color samples of each color and finish used.

1.03 DELIVERY, STORAGE, AND HANDLING

A. Deliver products to site in sealed and labeled containers; inspect to verify acceptability.

B. Container Label: Include manufacturer's name, type of paint, brand name, lot number, brand code, coverage, surface preparation, drying time, cleanup requirements, color designation, and instructions for mixing and reducing.

C. Paint Materials: Store at minimum ambient temperature of 45 degrees F and a maximum of 90 degrees F, in ventilated area, and as required by manufacturer's instructions.

1.04 FIELD CONDITIONS

A. Do not apply materials when surface and ambient temperatures are outside the paint product manufacturer's temperature ranges.

B. Follow manufacturer's recommended procedures for producing best results, including testing of substrates, moisture in substrates, and humidity and temperature limitations.

PART 2 PRODUCTS

2.01 MANUFACTURERS

A. Provide paints and finishes from the same manufacturer to the greatest extent possible.

2.02 PAINTS AND FINISHES - GENERAL

A. Paints and Finishes: Ready-mixed, unless required to be a field-catalyzed paint.
   1. Provide paints and finishes of a soft paste consistency, capable of being readily and uniformly dispersed to a homogeneous coating, with good flow and brushing properties, and capable of drying or curing free of streaks or sags.
   2. Supply each paint material in quantity required to complete entire project's work from a single production run.
   3. Do not reduce, thin, or dilute paint or finishes or add materials unless such procedure is described explicitly in manufacturer's product instructions.

B. Flammability: Comply with applicable code for surface burning characteristics.

2.03 PAINT SYSTEMS - EXTERIOR

A. Exterior Surfaces to be Painted, Unless Otherwise Indicated: Including primed metal.
   1. Two top coats Color: Yellow.
   2. Top Coat(s): Exterior Light Industrial Coating, Water Based; MPI #161, 163, or 164.

a. Products:
1) Rust-Oleum Corporation 3800 System DTM Acrylic Enamel. (MPI #161, 163, 164): www.rustoleum.com/#sle.

2.04 ACCESSORY MATERIALS

A. Accessory Materials: Provide primers, sealers, cleaning agents, cleaning cloths, sanding materials, and clean-up materials as required for final completion of painted surfaces.

B. Patching Material: Latex filler.

C. Fastener Head Cover Material: Latex filler.

PART 3 EXECUTION

3.01 EXAMINATION

A. Do not begin application of paints and finishes until substrates have been properly prepared.

B. Verify that surfaces are ready to receive work as instructed by the product manufacturer.

C. Examine surfaces scheduled to be finished prior to commencement of work. Report any condition that may potentially affect proper application.

D. Test shop-applied primer for compatibility with subsequent cover materials.

3.02 PREPARATION

A. Clean surfaces thoroughly and correct defects prior to application.

B. Prepare surfaces using the methods recommended by the manufacturer for achieving the best result for the substrate under the project conditions.

C. Remove or mask surface appurtenances, including electrical plates, hardware, light fixture trim, escutcheons, and fittings, prior to preparing surfaces for finishing.

D. Seal surfaces that might cause bleed through or staining of topcoat.

E. Remove mildew from impervious surfaces by scrubbing with solution of tetra-sodium phosphate and bleach. Rinse with clean water and allow surface to dry.

F. Galvanized Surfaces:
1. Remove surface contamination and oils and wash with solvent according to SSPC-SP 1.

G. Ferrous Metal:
1. Solvent clean according to SSPC-SP 1.
2. Remove rust, loose mill scale, and other foreign substances using methods recommended in writing by paint manufacturer and blast cleaning in accordance with SSPC-SP 6/NACE No.3. Protect from corrosion until coated.

3.03 APPLICATION

A. Apply products in accordance with manufacturer's written instructions and recommendations in "MPI Architectural Painting Specification Manual".

B. Do not apply finishes to surfaces that are not dry. Allow applied coats to dry before next coat is applied.

C. Apply each coat to uniform appearance.

D. Vacuum clean surfaces of loose particles. Use tack cloth to remove dust and particles just prior to applying next coat.

E. Reinstall electrical cover plates, hardware, light fixture trim, escutcheons, and fittings removed prior to finishing.

3.04 CLEANING

A. Collect waste material that could constitute a fire hazard, place in closed metal containers, and remove daily from site.

END OF SECTION 09 91 13

SECTION 23 05 13
COMMON MOTOR REQUIREMENTS FOR HVAC EQUIPMENT

PART 1 GENERAL

1.01 SUBMITTALS

A. Product Data: Provide wiring diagrams with electrical characteristics and connection requirements.

B. Manufacturer's Installation Instructions: Indicate setting, mechanical connections, lubrication, and wiring instructions.

C. Operation Data: Include instructions for safe operating procedures.

D. Maintenance Data: Include assembly drawings, bearing data including replacement sizes, and lubrication instructions.

1.02 QUALITY ASSURANCE

A. Comply with NFPA 70.

B. Products Requiring Electrical Connection: Listed and classified by Underwriters Laboratories Inc. as suitable for the purpose specified and indicated.

1.03 DELIVERY, STORAGE, AND HANDLING

A. Protect motors stored on site from weather and moisture by maintaining factory covers and suitable weather-proof covering. For extended outdoor storage, remove motors from equipment and store separately.

PART 2 PRODUCTS

2.01 GENERAL CONSTRUCTION AND REQUIREMENTS

A. Electrical Service:
   1. Motors 1/2 HP and Smaller: 115 volts, single phase, 60 Hz.

B. Nominal Efficiency:
   1. Open Motor with Two Poles: 82.5.
   2. Open Motor with Four Poles: 82.5.
   3. Open Motor with Six Poles: 50.0.
   4. Enclosed Motor with Two Poles: 75.5.
   5. Enclosed Motor with Four Poles: 82.5.
   6. Enclosed Motor with Six Poles: 50.0.

C. Construction:
   1. Open drip-proof type except where specifically noted otherwise.
   2. Design for continuous operation in 104 degrees F environment.
   3. Design for temperature rise in accordance with NEMA MG 00001 limits for insulation class, service factor, and motor enclosure type.

D. Visible Nameplate: Indicating motor horsepower, voltage, phase, cycles, RPM, full load amps, locked rotor amps, frame size, manufacturer's name and model number, service factor, power factor, efficiency.

E. Wiring Terminations:
   1. Provide terminal lugs to match branch circuit conductor quantities, sizes, and materials indicated. Enclose terminal lugs in terminal box sized to NFPA 70, threaded for conduit.
   2. For fractional horsepower motors where connection is made directly, provide threaded conduit connection in end frame.

PART 3 EXECUTION

3.01 INSTALLATION

A. Install in accordance with manufacturer's instructions.

B. Install securely on firm foundation. Mount ball bearing motors with shaft in any position.

C. Check line voltage and phase and ensure agreement with nameplate.

END OF SECTION 23 05 13

SECTION 23 05 17
SLEEVES AND SLEEVE SEALS FOR HVAC PIPING

PART 1 GENERAL

1.01 SUBMITTALS

A. Shop Drawings: Indicate pipe materials used, jointing methods, supports, floor and wall penetration seals. Indicate installation, layout, weights, mounting and support details, and piping connections.

1.02 DELIVERY, STORAGE, AND HANDLING

A. Deliver and store sleeve and sleeve seals in shipping containers, with labeling in place.

B. Provide temporary protective coating on cast iron and steel sleeves if shipped loose.

PART 2 PRODUCTS

2.01 PIPE SLEEVES

A. Plastic or Sheet Metal: Pipe passing through interior walls, partitions, and floors, unless steel or brass sleeves are specified below.

2.02 PIPE-SLEEVE SEALS

A. Sealing Compounds:
   1. Provide packing and sealing compound to fill pipe to sleeve thickness.
   2. Combined packing and seal compound is to match partition fire-resistance hourly rating.

B. Pipe Sleeve Material:
   1. Bearing Walls: Steel, cast iron, or terra-cotta pipe.
   2. Masonry Structures: Sheet metal or fiber.

C. Wall Sleeve: PVC material with waterstop collar, and nailer end-caps.

PART 3 EXECUTION

3.01 PREPARATION

A. Ream pipe and tube ends. Remove burrs. Bevel plain end ferrous pipe.

B. Remove scale and foreign material, from inside and outside, before assembly.

3.02 INSTALLATION

A. Route piping in orderly manner, plumb and parallel to building structure. Maintain gradient.

B. Install piping to conserve building space, to not interfere with use of space and other work.

C. Install piping and pipe sleeves to allow for expansion and contraction without stressing pipe, joints, or connected equipment.

D. Provide sleeves when penetrating footings, floors, walls, partitions, and _____. Seal pipe including sleeve penetrations to achieve fire resistance equivalent to fire separation required.

E. Manufactured Sleeve-Seal Systems:
   1. Install manufactured sleeve-seal systems in sleeves located in grade slabs and exterior concrete walls at piping entrances into building.
   2. Provide sealing elements of the size, quantity, and type required for the piping and sleeve inner diameter or penetration diameter.
   3. Locate piping in center of sleeve or penetration.
   4. Install field assembled sleeve-seal system components in annular space between sleeve and piping.
   5. Tighten bolting for a water-tight seal.
   6. Install in accordance with manufacturer's recommendations.

F. When installing more than one piping system material, ensure system components are compatible and joined to ensure the integrity of the system. Provide necessary joining fittings. Ensure flanges, union, and couplings for servicing are consistently provided.

3.03 CLEANING

A. Upon completion of work, clean all parts of the installation.

B. Clean equipment, pipes, valves, and fittings of grease, metal cuttings, and sludge that may have accumulated from the installation and testing of the system.

END OF SECTION 23 05 17

SECTION 23 05 29
HANGERS AND SUPPORTS FOR HVAC PIPING AND EQUIPMENT

PART 1 GENERAL

1.01 ADMINISTRATIVE REQUIREMENTS

A. Coordination:
   1. Coordinate sizes and arrangement of supports and bases with the actual equipment and components to be installed.
   2. Coordinate the work with other trades to provide additional framing and materials required for installation.
   3. Coordinate compatibility of support and attachment components with mounting surfaces at the installed locations.
   4. Coordinate the arrangement of supports with ductwork, piping, equipment and other potential conflicts installed under other sections or by others.
   5. Notify Engineer of any conflicts with or deviations from Contract Documents. Obtain direction before proceeding with work.

1.02 SUBMITTALS

A. Product Data: Provide manufacturer's standard catalog pages and data sheets for channel (strut) framing systems, nonpenetrating rooftop supports, post-installed concrete and masonry anchors, and thermal insulated pipe supports.

B. Shop Drawings: Include details for fabricated hangers and supports where materials or methods other than those indicated are proposed for substitution.

C. Manufacturer's Instructions: Indicate application conditions and limitations of use stipulated by product testing agency. Include instructions for storage, handling, protection, examination, preparation, and installation of product.

1.03 DELIVERY, STORAGE, AND HANDLING

A. Receive, inspect, handle, and store products in accordance with manufacturer's instructions.

PART 2 PRODUCTS

2.01 SUPPORT AND ATTACHMENT COMPONENTS

A. General Requirements:
   1. Provide all required hangers, supports, anchors, fasteners, fittings, accessories, and hardware as necessary for the complete installation of plumbing work.
   2. Provide products listed, classified, and labeled as suitable for the purpose intended, where applicable.
   3. Where support and attachment component types and sizes are not indicated, select in accordance with manufacturer's application criteria as required for the load to be supported. Include consideration for vibration, equipment operation, and shock loads where applicable.
   4. Do not use wire, chain, perforated pipe strap, or wood for permanent supports unless specifically indicated or permitted.
   5. Steel Components: Use corrosion resistant materials suitable for the environment where installed.
      a. Zinc-Plated Steel: Electroplated in accordance with ASTM B633.
      b. Galvanized Steel: Hot-dip galvanized after fabrication in accordance with ASTM A123/A123M or ASTM A153/A153M.

B. Prefabricated Trapeze-Framed Metal Strut Systems:
   1. MFMA-4 compliant, pre-fabricated, MSS SP-58 type 59 continuous-slot metal strut channel with associated tracks, fittings, and related accessories.
   2. Strut Channel or Bracket Material:
      a. Indoor Dry Locations: Use painted steel, zinc-plated steel, or galvanized steel.
      b. Outdoor and Damp or Wet Indoor Locations: Use galvanized steel.

3. Accessories: Provide bracket covers, cable basket clips, cable tray clips, clamps, conduit clamps, fire-retarding brackets, j-hooks, protectors, and vibration dampeners.

C. Hanger Rods:
   1. Threaded zinc-plated steel unless otherwise indicated.

D. Thermal Insulated Pipe Supports:
   1. General Requirements:
      a. Insulated pipe supports to be provided at hanger, support, and guide locations on pipe requiring insulation or additional support.
      b. Surface Burning Characteristics: Flame spread index/smoke developed index of 5/30, maximum, when tested in accordance with ASTM E84 or UL 723.
      c. Pipe supports to be provided for nominally sized, 1/2 to 30 inch iron pipes.
      d. Insulation inserts to consist of rigid polyisocyanurate (urethane) insulation surrounded by a 360 degree, PVC jacketing.
   2. PVC Jacket:
      a. Pipe insulation protection shields to be provided with a ball bearing hinge and locking seam.
      b. Moisture Vapor Transmission: 0.0071 perm inch, when tested in accordance with ASTM E96/E96M.
      c. Thickness: 60 mil.
   3. Pipe insulation protection shields to be provided at the hanger points and guide locations on pipes requiring insulation as indicated on drawings.

E. Pipe Supports:
   1. Material: ASTM A395/A395M ductile iron, ASTM A36/A36M carbon steel, ASTM A47/A47M malleable iron, ASTM A181/A181M forged steel, or ASTM A283/A283M steel.
   2. Liquid Temperatures Up To 122 degrees F:
      a. Overhead Support: MSS SP-58 Types 1, 3 through 12.
      b. Support From Below: MSS SP-58 Types 35 through 38.

F. Pipe Stanchions:
   1. Material: Malleable iron, ASTM A47/A47M; or carbon steel, ASTM A36/A36M.
   2. Provide coated or plated saddles to isolate steel hangers from dissimilar metal tube or pipe.
   3. For pipe runs, use stanchions of same type and material where vertical adjustment is required for stationary pipe.

G. Beam Clamps:
   1. MSS SP-58 types 19 through 23, 25 or 27 through 30 based on required load.
   2. Beam C-Clamp: MSS SP-58 type 23, malleable iron and steel with plain, stainless steel, and zinc finish.
   3. Small or Junior Beam Clamp: MSS SP-58 type 19, malleable iron with plain finish. For inverted usage provide manufacturer listed size(s).
   4. Wide Mouth Beam Clamp: MSS SP-58 type 19, malleable iron with plain finish.
   5. Centerload Beam Clamp with Extension Piece: MSS SP-58 type 30, malleable iron with plain finish.
   6. FM (AG) and UL (DIR) Approved Beam Clamp: MSS SP-58 type 19, plain finish,
   7. Provide clamps with hardened steel cup-point set screws and lock-nuts for anchoring in place.
   8. Material: ASTM A395/A395M ductile iron, ASTM A36/A36M carbon steel, ASTM A47/A47M malleable iron, ASTM A181/A181M forged steel, or ASTM A283/A283M steel.

H. Riser Clamps:
   1. For insulated pipe runs, provide two bolt-type clamps designed for installation under insulation.
   2. MSS SP-58 type 1 or 8, carbon steel or steel with epoxy plated, plain, stainless steel, or zinc plated finish.

3. Medium Split Horizontal Pipe Clamp: MSS SP-58 type 4, carbon steel or stainless steel with epoxy plated, plain, stainless steel, or zinc plated finish.
4. Copper Tube Pipe Clamp: MSS SP-58 type 8, epoxy plated copper.
5. UL (DIR) listed: Pipe sizes 1/2 to 8 inch.

I. Pipe Hangers:
1. Split Ring Hangers:
a. Provide hinged split ring and yoke roller hanger with epoxy copper or plain finish.
b. Material: ASTM A47/A47M malleable iron or ASTM A36/A36M carbon steel.
c. Provide hanger rod and nuts of the same type and material for a given pipe run.
d. Provide coated or plated hangers to isolate steel hangers from dissimilar metal tube or pipe.

J. Dielectric Barriers: Provide between metallic supports and metallic piping and associated items of dissimilar type; acceptable dielectric barriers include rubber or plastic sheets or coatings attached securely to pipe or item.

K. Nonpenetrating Rooftop Supports for Low-Slope Roofs:
1. Base Sizes: As required to distribute load sufficiently to prevent indentation of roofing assembly.
2. Attachment/Support Fixtures: As recommended by manufacturer, same type as indicated for equivalent indoor hangers and supports.
3. Mounting Height: Provide minimum clearance of 6 inches under supported component to top of roofing.

L. Pipe Shields for Insulated Piping:
1. MSS SP-58 Type 40, ASTM A1011/A1011M steel or ASTM A653/A653M carbon steel
2. General Construction and Requirements:
a. Surface Burning Characteristics: Comply with ASTM E84 or UL 723.
b. Shields Material: UV-resistant polypropylene with glass fill.
c. Maximum Insulated Pipe Outer Diameter: 12-5/8 inch.
d. Minimum Service Temperature: Minus 40 degrees F.
e. Maximum Service Temperature: 178 degrees F.
f. Pipe shields to be provided at hanger, support, and guide locations on pipe requiring insulation or additional support.

M. Anchors and Fasteners:
1. Unless otherwise indicated and where not otherwise restricted, use the anchor and fastener types indicated for the specified applications.

PART 3 EXECUTION

3.01 INSTALLATION

A. Install products in accordance with manufacturer's instructions.

B. Provide independent support from building structure. Do not provide support from piping, ductwork, conduit, or other systems.

C. Unless specifically indicated or approved by Engineer, do not provide support from suspended ceiling support system or ceiling grid.

D. Unless specifically indicated or approved by Engineer, do not provide support from roof deck.

E. Do not penetrate or otherwise notch or cut structural members without approval of Structural Engineer.

F. Provide thermal insulated pipe supports complete with hangers and accessories. Install thermal insulated pipe supports during the installation of the piping system.

G. Equipment Support and Attachment:
1. Use metal fabricated supports or supports assembled from metal channel (strut) to support equipment as required.

2. Use metal channel (strut) secured to studs to support equipment surface-mounted on hollow stud walls when wall strength is not sufficient to resist pull-out.
3. Use metal channel (strut) to support surface-mounted equipment in wet or damp locations to provide space between equipment and mounting surface.
4. Securely fasten floor-mounted equipment. Do not install equipment such that it relies on its own weight for support.

H. Secure fasteners according to manufacturer's recommended torque settings.

I. Remove temporary supports.

END OF SECTION 23 05 29

SECTION 23 05 53
IDENTIFICATION FOR HVAC PIPING AND EQUIPMENT

PART 1 GENERAL

1.01 SUBMITTALS

A. Product Data: Provide manufacturers catalog literature for each product required.

B. Manufacturer's Installation Instructions: Indicate special procedures, and installation.

C. Project Record Documents: Record actual locations of tagged valves.

PART 2 PRODUCTS

2.01 IDENTIFICATION APPLICATIONS

A. Air Handling Units: Nameplates.

B. Instrumentation: Tags.

C. Piping: Pipe markers.

D. Pumps: Nameplates.

E. Small-sized Equipment: Tags.

F. Thermostats: Nameplates.

G. Valves: Tags and ceiling tacks where located above lay-in ceiling.

2.02 NAMEPLATES

A. Letter Color: White.

B. Letter Height: 1/4 inch.

C. Background Color: Black.

D. Plastic: Comply with ASTM D709.

2.03 TAGS

A. Metal Tags: Brass with stamped letters; tag size minimum 1-1/2 inch diameter with smooth edges.

2.04 PIPE MARKERS

A. Plastic Pipe Markers: Factory fabricated, flexible, semi- rigid plastic, preformed to fit around pipe or pipe covering; minimum information indicating flow direction arrow and identification of fluid being conveyed.

B. Color code as follows:
   1. Heating, Cooling, and Boiler Feedwater: Green with white letters.

2.05 CEILING TACKS

A. Description: Steel with 3/4 inch diameter color coded head.

B. Color code as follows:
   1. HVAC Equipment: Yellow.
   2. Fire Dampers and Smoke Dampers: Red.
   3. Heating/Cooling Valves: Blue.

PART 3 EXECUTION

3.01 PREPARATION

A. Degrease and clean surfaces to receive adhesive for identification materials.

3.02 INSTALLATION

A. Install nameplates with corrosive-resistant mechanical fasteners, or adhesive. Apply with sufficient adhesive to ensure permanent adhesion and seal with clear lacquer.

B. Install tags with corrosion resistant chain.

C. Install plastic pipe markers in accordance with manufacturer's instructions.

D. Use tags on piping 3/4 inch diameter and smaller.
   1. Identify service, flow direction, and pressure.
   2. Install in clear view and align with axis of piping.
   3. Locate identification not to exceed 20 feet on straight runs including risers and drops, adjacent to each valve and Tee, at each side of penetration of structure or enclosure, and at each obstruction.

E. Locate ceiling tacks to locate valves or dampers above lay-in panel ceilings. Locate in corner of panel closest to equipment.

END OF SECTION 23 05 53

SECTION 23 05 93
TESTING, ADJUSTING, AND BALANCING FOR HVAC

PART 1 GENERAL

1.01 SUBMITTALS

A. TAB Plan: Submit a written plan indicating the testing, adjusting, and balancing standard to be followed and the specific approach for each system and component.
   1. Include at least the following in the plan:
      a. List of all air flow, water flow, sound level, system capacity and efficiency measurements to be performed and a description of specific test procedures, parameters, formulas to be used.
      b. Copy of field checkout sheets and logs to be used, listing each piece of equipment to be tested, adjusted and balanced with the data cells to be gathered for each.
      c. Identification and types of measurement instruments to be used and their most recent calibration date.
      d. Discussion of what notations and markings will be made on the duct and piping drawings during the process.
      e. Final test report forms to be used.
      f. Confirmation of understanding of the outside air ventilation criteria under all conditions.
      g. Method of verifying and setting minimum outside air flow rate will be verified and set and for what level (total building, zone, etc.).
      h. Procedures for formal progress reports, including scope and frequency.
      i. Procedures for formal deficiency reports, including scope, frequency and distribution.

B. Control System Coordination Reports: Communicate in writing to the controls installer all setpoint and parameter changes made or problems and discrepancies identified during TAB that affect, or could affect, the control system setup and operation.

C. Progress Reports.

D. Final Report: Indicate deficiencies in systems that would prevent proper testing, adjusting, and balancing of systems and equipment to achieve specified performance.
   1. Revise TAB plan to reflect actual procedures and submit as part of final report.
   2. Submit draft copies of report for review prior to final acceptance of Project. Provide final copies for Engineer and for inclusion in operating and maintenance manuals.
   3. Include actual instrument list, with manufacturer name, serial number, and date of calibration.
   4. Form of Test Reports: Where the TAB standard being followed recommends a report format use that; otherwise, follow ASHRAE Std 111.
   5. Units of Measure: Report data in I-P (inch-pound) units only.
   6. Include the following on the title page of each report:
      a. Name of Testing, Adjusting, and Balancing Agency.
      b. Address of Testing, Adjusting, and Balancing Agency.
      c. Telephone number of Testing, Adjusting, and Balancing Agency.
      d. Project name.
      e. Project location.
      f. Project Engineer.
      g. Project Engineer.
      h. Project Contractor.
      i. Project altitude.
      j. Report date.

E. Project Record Documents: Record actual locations of flow measuring stations and balancing valves and rough setting.

PART 2 PRODUCTS - NOT USED

PART 3 EXECUTION

3.01 GENERAL REQUIREMENTS

A. Perform total system balance in accordance with one of the following:
   1. AABC (NSTSB), AABC National Standards for Total System Balance.
   2. SMACNA (TAB).

B. Begin work after completion of systems to be tested, adjusted, or balanced and complete work prior to Substantial Completion of the project.

C. Where HVAC systems and/or components interface with life safety systems, including fire and smoke detection, alarm, and control, coordinate scheduling and testing and inspection procedures with the authorities having jurisdiction.

D. TAB Agency Qualifications:
   1. Company specializing in the testing, adjusting, and balancing of systems specified in this section.
   2. Certified by one of the following:
      a. AABC, Associated Air Balance Council: www.aabc.com/#sle; upon completion submit AABC National Performance Guaranty.
      b. TABB, The Testing, Adjusting, and Balancing Bureau of National Energy Management Institute: www.tabbcertified.org/#sle.

E. TAB Supervisor and Technician Qualifications: Certified by same organization as TAB agency.

3.02 EXAMINATION

A. Verify that systems are complete and operable before commencing work. Ensure the following conditions:
   1. Systems are started and operating in a safe and normal condition.
   2. Temperature control systems are installed complete and operable.
   3. Proper thermal overload protection is in place for electrical equipment.
   4. Final filters are clean and in place. If required, install temporary media in addition to final filters.
   5. Duct systems are clean of debris.
   6. Fans are rotating correctly.
   7. Fire and volume dampers are in place and open.
   8. Air coil fins are cleaned and combed.
   9. Access doors are closed and duct end caps are in place.
   10. Air outlets are installed and connected.
   11. Duct system leakage is minimized.

B. Submit field reports. Report defects and deficiencies that will or could prevent proper system balance.

C. Beginning of work means acceptance of existing conditions.

3.03 PREPARATION

A. Provide instruments required for testing, adjusting, and balancing operations. Make instruments available to Engineer to facilitate spot checks during testing.

B. Provide additional balancing devices as required.

3.04 ADJUSTMENT TOLERANCES

A. Air Handling Systems: Adjust to within plus or minus 5 percent of design for supply systems and plus or minus 10 percent of design for return and exhaust systems.

B. Air Outlets and Inlets: Adjust total to within plus 10 percent and minus 5 percent of design to space. Adjust outlets and inlets in space to within plus or minus 10 percent of design.

3.05 RECORDING AND ADJUSTING

A. Ensure recorded data represents actual measured or observed conditions.

B. Permanently mark settings of valves, dampers, and other adjustment devices allowing settings to be restored. Set and lock memory stops.

C. Mark on drawings the locations where traverse and other critical measurements were taken and cross reference the location in the final report.

D. After adjustment, take measurements to verify balance has not been disrupted or that such disruption has been rectified.

E. Leave systems in proper working order, replacing belt guards, closing access doors, closing doors to electrical switch boxes, and restoring thermostats to specified settings.

F. At final inspection, recheck random selections of data recorded in report. Recheck points or areas as selected and witnessed by the Owner.

3.06 AIR SYSTEM PROCEDURE

A. Adjust air handling and distribution systems to provide required or design supply, return, and exhaust air quantities.

B. Make air quantity measurements in ducts by Pitot tube traverse of entire cross sectional area of duct.

C. Adjust distribution system to obtain uniform space temperatures free from objectionable drafts and noise.

D. Use volume control devices to regulate air quantities only to extend that adjustments do not create objectionable air motion or sound levels. Effect volume control by duct internal devices such as dampers and splitters.

E. Vary total system air quantities by adjustment of fan speeds. Provide drive changes required. Vary branch air quantities by damper regulation.

F. Provide system schematic with required and actual air quantities recorded at each outlet or inlet.

G. Measure static air pressure conditions on air supply units, including filter and coil pressure drops, and total pressure across the fan. Make allowances for 50 percent loading of filters.

H. Adjust outside air automatic dampers, outside air, return air, and exhaust dampers for design conditions.

I. Measure temperature conditions across outside air, return air, and exhaust dampers to check leakage.

J. Where modulating dampers are provided, take measurements and balance at extreme conditions. Balance variable volume systems at maximum air flow rate, full cooling, and at minimum air flow rate, full heating.

END OF SECTION 23 05 93

This page intentionally left blank

SECTION 23 07 13
DUCT INSULATION

PART 1 GENERAL

1.01 SUBMITTALS

A. Product Data: Provide product description, thermal characteristics, list of materials and thickness for each service, and locations.

B. Manufacturer's Instructions: Indicate installation procedures necessary to ensure acceptable workmanship and that installation standards will be achieved.

1.02 DELIVERY, STORAGE, AND HANDLING

A. Accept materials on site in original factory packaging, labelled with manufacturer's identification, including product density and thickness.

B. Protect insulation from weather and construction traffic, dirt, water, chemical, and mechanical damage, by storing in original wrapping.

1.03 FIELD CONDITIONS

A. Maintain ambient temperatures and conditions required by manufacturers of adhesives, mastics, and insulation cements.

B. Maintain temperature during and after installation for minimum period of 24 hours.

PART 2 PRODUCTS

2.01 REGULATORY REQUIREMENTS

A. Surface Burning Characteristics: Flame spread index/Smoke developed index of 25/50, maximum, when tested in accordance with ASTM E84 or UL 723.

2.02 GLASS FIBER, FLEXIBLE

A. Manufacturer:

B. Insulation: ASTM C553; flexible, noncombustible blanket.
   1. K value: 0.36 at 75 degrees F, when tested in accordance with ASTM C518.
   2. Maximum Service Temperature: 1,200 degrees F.
   3. Maximum Water Vapor Absorption: 5.0 percent by weight.

C. Vapor Barrier Jacket:
   1. Kraft paper with glass fiber yarn and bonded to aluminized film.
   2. Moisture Vapor Permeability: 0.02 perm inch, when tested in accordance with ASTM E96/E96M.
   3. Secure with pressure-sensitive tape.

D. Vapor Barrier Tape:
   1. Kraft paper reinforced with glass fiber yarn and bonded to aluminized film, with pressure-sensitive rubber-based adhesive.

E. Outdoor Vapor Barrier Mastic:
   1. Vinyl emulsion type acrylic or mastic, compatible with insulation, black color.

2.03 FLEXIBLE ELASTOMERIC CELLULAR INSULATION

A. Insulation: Preformed flexible elastomeric cellular rubber insulation complying with ASTM C534/C534M Grade 1, in sheet form.
   1. Minimum Service Temperature: Minus 40 degrees F.
   2. Maximum Service Temperature: 180 degrees F.
   3. Connection: Waterproof vapor barrier adhesive.

B. Elastomeric Foam Adhesive: Air dried, contact adhesive, compatible with insulation.

C. Weather Barrier Coating: Air dried, contact adhesive, compatible with insulation and ASTM E84 compliant.

2.04 WEATHER BARRIER COATINGS

A. Weather-Resistive Barrier Coating: Fire-resistive, UV resistant, water-based mastic for use over closed cell polyethylene and polyurethane foam insulation; applied with glass fiber or synthetic reinforcing mesh.
   1. Surface Burning Characteristics: Flame spread index of 25 or less, smoke developed index of 450 or less, Class A, when tested in accordance with ASTM E84.
   2. Water Vapor Permeance: Greater than 1.0 perm in accordance with ASTM E96/E96M.

2.05 JACKETING AND ACCESSORIES

A. Flexible Weather-Proofing Outdoor Jacket: Self-healing, field-applied outdoor cladding.
   1. Material: Aluminum foil/polymer laminate with rubberized asphalt layer and acrylic adhesive.
   2. Thickness: 34 mil, 0.034 inch.
   3. Finish: Embossed.
   4. Color: Silver.
   5. Water Vapor Transmission: 0.002 perm inch, maximum, when tested in accordance with ASTM E96/E96M.
   6. Mold Resistance: Pass when tested in accordance with ASTM C1338.
   7. Emissivity: 0.30 when tested in accordance with ASTM C1371.

B. Reinforced Tape:
   1. FSK tape suitable for sealing seams between insulation, insulated elbows, and fittings resulting in a tight, smooth surface without wrinkles.
   2. Comply with UL 723 or ASTM E84.
   3. Moisture Vapor Permeability: 0.00 perm inch, when tested in accordance with ASTM E96/E96M.

2.06 DUCT LINER

A. Elastomeric Foam Insulation: Preformed flexible elastomeric cellular rubber insulation complying with ASTM C534/C534M Grade 1, in sheet form.
   1. Minimum Service Temperature: Minus 40 degrees F.
   2. Maximum Service Temperature: 180 degrees F.
   3. Connection: Waterproof vapor barrier adhesive.

B. Elastomeric Foam Adhesive: Air dried, contact adhesive, compatible with insulation. Comply with ASTM C916.

C. Adhesive: Waterproof, fire-retardant type, ASTM C916.

D. Liner Fasteners: Galvanized steel, self-adhesive pad with integral head.

PART 3 EXECUTION

3.01 EXAMINATION

A. Test ductwork for design pressure prior to applying insulation materials.

B. Verify that surfaces are clean, foreign material removed, and dry.

3.02 INSTALLATION

A. Install in accordance with manufacturer's instructions.

B. Install in accordance with NAIMA National Insulation Standards.

C. Insulated Ducts Conveying Air Below Ambient Temperature:
   1. Provide insulation with vapor barrier jackets.
   2. Finish with tape and vapor barrier jacket.
   3. Continue insulation through walls, sleeves, hangers, and other duct penetrations.
   4. Insulate entire system, including fittings, joints, flanges, fire dampers, flexible connections, and expansion joints.

D. Insulated Ducts Conveying Air Above Ambient Temperature:

1. Insulate fittings and joints. Where service access is required, bevel and seal ends of insulation.

E. Exterior Applications: Provide insulation with vapor barrier jacket. Cover with caulked aluminum jacket with seams located on bottom side of horizontal duct section.

F. Slope exterior ductwork to shed water.

G. External Duct Insulation Application:
   1. Secure insulation with vapor barrier with wires and seal jacket joints with vapor barrier adhesive or tape to match jacket.
   2. Secure insulation without vapor barrier with staples, tape, or wires.
   3. Install without sag on underside of duct. Use adhesive or mechanical fasteners where necessary to prevent sagging. Lift duct off trapeze hangers and insert spacers.
   4. Seal vapor barrier penetrations by mechanical fasteners with vapor barrier adhesive.
   5. Stop and point insulation around access doors and damper operators to allow operation without disturbing wrapping.

H. Duct and Plenum Liner Application:
   1. Secure insulation with mechanical liner fasteners. Refer to SMACNA (DCS) for spacing.
   2. Seal and smooth joints. Seal and coat transverse joints.
   3. Seal liner surface penetrations with adhesive.
   4. Duct dimensions indicated are net inside dimensions required for airflow. Increase duct size to allow for insulation thickness.

END OF SECTION 23 07 13

This page intentionally left blank

SECTION 23 07 19
HVAC PIPING INSULATION

PART 1 GENERAL

1.01 SUBMITTALS

A. Product Data: Provide product description, thermal characteristics, list of materials and thickness for each service, and locations.

B. Manufacturer's Instructions: Indicate installation procedures that ensure acceptable workmanship and installation standards will be achieved.

1.02 DELIVERY, STORAGE, AND HANDLING

A. Accept materials on site, labeled with manufacturer's identification, product density, and thickness.

PART 2 PRODUCTS

2.01 REGULATORY REQUIREMENTS

A. Surface Burning Characteristics: Flame spread index/Smoke developed index of 25/50, maximum, when tested in accordance with ASTM E84 or UL 723.

2.02 GLASS FIBER, RIGID

2.03 FLEXIBLE ELASTOMERIC CELLULAR INSULATION

A. Insulation: Preformed flexible elastomeric cellular rubber insulation complying with ASTM C534/C534M Grade 1; use molded tubular material wherever possible.
   1. Minimum Service Temperature: Minus 40 degrees F.
   2. Maximum Service Temperature: 180 degrees F.
   3. Connection: Waterproof vapor barrier adhesive.

B. Elastomeric Foam Adhesive: Air dried, contact adhesive, compatible with insulation.

C. Weather Barrier Coating: Air dried, contact adhesive, compatible with insulation and ASTM E84 compliant.

2.04 WEATHER BARRIER COATINGS

A. Weather-Resistive Barrier Coating: Fire-resistive, UV resistant, water-based mastic for use over closed cell polyethylene and polyurethane foam insulation; applied with glass fiber or synthetic reinforcing mesh.
   1. Surface Burning Characteristics: Flame spread index of 25 or less, smoke developed index of 450 or less, Class A, when tested in accordance with ASTM E84.
   2. Water Vapor Permeance: Greater than 1.0 perm in accordance with ASTM E96/E96M.

2.05 JACKETING AND ACCESSORIES

A. ABS Plastic:
   1. Jacket: One piece molded type fitting covers and sheet material, off-white color.
      a. Minimum Service Temperature: Minus 40 degrees F.
      b. Maximum Service Temperature: 180 degrees F.
      c. Moisture Vapor Permeability: 0.012 perm inch, when tested in accordance with ASTM E96/E96M.
      d. Thickness: 30 mil, 0.030 inch.
      e. Connections: Brush on welding adhesive.

2.06 ENGINEERED WALL OUTLET SEALS AND REFRIGERANT PIPING INSULATION PROTECTION

A. Pipe Penetration Wall Seal: Seals HVAC piping wall penetrations with compression gasket wall mounted rigid plastic outlet cover.
   1. Outlet Cover Color: White.
   2. Water Penetration: Comply with ASTM E331.

3. Air Leakage: Comply with ASTM E283.
4. Air Permeance: Comply with ASTM E2178.

B. Insulation Protection System: Refrigerant piping insulation PVC protective cover.
1. PVC Insulation Cover Color: Black with full-length velcro fastener.
2. Weatherization and Ultraviolet Exposure Protection: Comply with ASTM G153.
3. Water/Vapor Permeability: Comply with ASTM E96/E96M.
4. Anti-Fungal and Anti-Microbial Resistance: Comply with ASTM G21.
5. Flame Spread and Smoke Development Rating of 24/450: Comply with ASTM E84 or UL 723.

2.07 ACCESSORIES

A. General Requirements:
1. Provide required accessories in accordance with and subject to the recommendations of the insulation manufacturer.
2. Furnish compatible materials which do not contribute to corrosion, soften, or otherwise attack surfaces to which applied, in either the wet or dry state.
3. Comply with ASTM C795 requirements for materials to be used on stainless steel surfaces.
4. Supply materials that are asbestos free.

B. Corrosion Inhibitors:
1. Corrosion Control Gel:
a. Corrosion Protection: Comply with ASTM B117 and ASTM D610.

PART 3 EXECUTION

3.01 EXAMINATION

A. Test piping for design pressure, liquid tightness, and continuity prior to applying insulation materials.

B. Verify that surfaces are clean and dry, with foreign material removed.

3.02 INSTALLATION

A. Install in accordance with manufacturer's instructions.

B. Install in accordance with NAIMA National Insulation Standards.

C. Insulated Pipes Conveying Fluids Below Ambient Temperature:
1. Insulate entire system, including fittings, valves, unions, flanges, strainers, flexible connections, pump bodies, and expansion joints.

D. Glass Fiber Insulated Pipes Conveying Fluids Below Ambient Temperature:
1. Provide vapor barrier jackets, factory-applied or field-applied; secure with self-sealing longitudinal laps and butt strips with pressure-sensitive adhesive. Secure with outward clinch expanding staples and vapor barrier mastic.
2. Insulate fittings, joints, and valves with molded insulation of like material and thickness as adjacent pipe. Finish with glass cloth and vapor barrier adhesive or PVC fitting covers.

E. Continue insulation through walls, sleeves, pipe hangers, and other pipe penetrations. Finish at supports, protrusions, and interruptions. At fire separations, see Section 07 84 00.

END OF SECTION 23 07 19

SECTION 23 09 13
INSTRUMENTATION AND CONTROL DEVICES FOR HVAC

PART 1 GENERAL

1.01 SUBMITTALS

A. Product Data: Provide description and engineering data for each control system component. Include sizing as requested. Provide data for each system component and software module.

B. Operation and Maintenance Data: Include inspection period, cleaning methods, recommended cleaning materials, and calibration tolerances.

C. Project Record Documents: Record actual location of control components, including panels, thermostats, and sensors.

D. Warranty: Submit manufacturer's warranty and ensure forms have been filled out in Owner's name and registered with manufacturer.

PART 2 PRODUCTS

2.01 EQUIPMENT - GENERAL

A. Products Requiring Electrical Connection: Listed and classified by Underwriters Laboratories Inc., as suitable for the purpose specified and indicated.

2.02 WALL-, SURFACE-, AND DUCT-MOUNT SENSORS

A. Temperature Sensors:
   1. Use thermistor or RTD type temperature sensing elements with characteristics resistant to moisture, vibration, and other conditions consistent with the application without affecting accuracy and life expectancy.
   2. Construct RTD of nickel or platinum with base resistance of 1000 ohms at 70 degrees F.
   3. 100 ohm platinum RTD is acceptable if used with project DDC controllers.
   4. Temperature Sensing Device: Compatible with project DDC controllers.
   5. Performance Characteristics:
      a. Temperature Transmitter:
         1) Accuracy: 0.10 degree F minimum or plus/minus 0.20 percent of span.
         2) Output: 4 to 20 mA.
      b. Room Sensors: Locking cover.
      c. Outside Air Sensors: Watertight inlet fitting shielded from direct rays of the sun.
      d. Room Temperature Sensors:
         1) Construct for surface mounting.
      e. Room Temperature Sensors with Integral Digital Display:
         1) Provide a four button keypad with the following capabilities:
            (a) Indication of space and outdoor temperatures.
            (b) Setpoint adjustment to accommodate room setpoint, DDC Input/Output Points List, and Sequence of Operation.
            (c) Display and control fan operation status.
            (d) Manual occupancy override and indication of occupancy status.
            (e) Controller mode status.
            (f) Password enabled setpoint and override modes.

B. Humidity Sensors, Outdoor-Mount:
   1. Digitally profiled thin-film capacitive sensor encased in a die-cast metal, weather-proof plastic or metal housing with solar shield.
   2. Measuring Scale: 0 to 100 percent RH, noncondensing, temperature compensated.
   3. Hardwired Output: Two-wire, 4 to 20 mA, loop powered.
   4. Accuracy: Plus/minus 1 percent between 20 to 40 percent RH linear range, NIST traceable with multi-point calibration.
   5. Temperature Sensor, Combined: Platinum RTD.

a. Transmitter: Fitted within device-interface enclosure, calibrated.
b. Monitoring Range: 32 to 122 degrees F, adjustable.
c. Hardwired Output: Two-wire, 4 to 20 mA, loop powered.
d. Accuracy: Plus/minus three percent. Adjustable on the transmitter end.

C. Humidity Sensors, Duct-Mounted:
1. Digitally profiled thin-film capacitive sensor probe extended from die-cast metal, weather-proof plastic or metal housing designed for duct mounting.
2. Measuring Scale: 0 to 100 percent RH, noncondensing, temperature compensated.
3. Hardwired Output: Two-wire, 4 to 20 mA, loop powered.
4. Accuracy: Plus/minus 1 percent between 20 to 40 percent RH linear range, NIST traceable with multi-point calibration.
5. Temperature Sensor, Combined: Platinum RTD.
a. Transmitter: Fitted within device-interface enclosure, calibrated.
b. Monitoring Range: Minus 40 to 122 degrees F, adjustable.
c. Hardwired Output: Two-wire, 4 to 20 mA, loop powered.
d. Accuracy: Plus/minus three percent. adjustable on the transmitter end.
6. Service Temperature: Minus 40 to 122 degrees F
7. Service Humidity: 0 to 100 percent RH, noncondensing.

D. IAQ (Indoor Air Quality) Sensors:
1. Form Factor: Surface mounted, desk mounted, or single-gang electrical-box-mounted module made of high-impact plastic or other resilient material.
2. Temperature Sensor:
a. Soild-state, integrated circuit type, 32 to 122 deg F range.
b. Accuracy: Plus/minus two percent within 0.1 deg resolution.
3. CO2 (Carbon Dioxide) Monitoring Sensor:
a. Non-dispersive infrared (NDIR) type, 0 to 100 %RH range.
b. Accuracy: Plus/minus 30 ppm within three percent of measured value.
4. Humidity Monitoring Sensor:
a. Thin-film capacitive, replaceable type, 0 to 2,000 or 5,000 ppm range, noncondensing.
b. Accuracy: Plus/minus two percent within 1.5 percent of measured value.
5. BAS, SCADA, or other Integrated Automation Link: ASHRAE Std 135 BACnet MS/TP.

E. Carbon Dioxide Sensors, Duct and Wall:
1. General: Provide nondispersive infrared (NDIR), diffusion sampling CO2 sensors with integral transducers and linear output.
2. Air Temperature: Range of 32 to 122 degrees F.
3. Relative Humidity: Range of 0 to 95 percent (noncondensing).
4. Calibration Characteristics:
a. Automatically compensating algorithm for sensor drift due to sensor degradation.
b. Maximum Drift: 2 percent.
c. User calibratable with a minimum calibration interval of 5 years.
5. Construction:
a. Sensor Chamber: Noncorrosive material for neutral effect on carbon dioxide sample.
b. Provide duct mounted sensors with duct probe designed to protect sensing element from dust accumulation and mechanical damage.
c. Housing: High impact plastic.

2.03 THERMOSTATS

A. Room-Mounted Thermostat Accessories:
1. Thermostat Covers: Brushed aluminum.
2. Insulating Bases: For thermostats located on exterior walls.

B. Outdoor Reset Thermostats:

1. Remote bulb or bimetal rod and tube type, proportioning action with adjustable throttling range, adjustable setpoint.
2. Scale range: Minus 10 to 70 degrees F.

PART 3 EXECUTION

3.01 EXAMINATION

A. Verify existing conditions before starting work.

B. Verify that systems are ready to receive work.

C. Beginning of installation means installer accepts existing conditions.

D. Sequence work to ensure installation of components is complementary to installation of similar components in other systems.

E. Coordinate installation of system components with installation of mechanical systems equipment such as air handling units and air terminal units.

F. Ensure installation of components is complementary to installation of similar components.

G. Coordinate installation of system components with installation of mechanical systems equipment such as air handling units and air terminal units.

3.02 INSTALLATION

A. Install in accordance with manufacturer's instructions.

B. Check and verify location of thermostats with plans and room details before installation. Locate 60 inches above floor. Align with lighting switches and humidistats; see Section 26 27 26.

C. Mount outdoor reset thermostats and outdoor sensors indoors, with sensing elements outdoors with sun shield.

D. Provide thermostats in aspirating boxes in where indicated.

E. Provide guards on thermostats where indicated.

F. Provide conduit and electrical wiring in accordance with Section 26 05 83. Electrical material and installation shall be in accordance with appropriate requirements of Division 26.

END OF SECTION 23 09 13

This page intentionally left blank

SECTION 23 09 23
DIRECT-DIGITAL CONTROL SYSTEM FOR HVAC

PART 1 GENERAL

1.01 SUBMITTALS

A. Product Data: Provide data for each system component and software module.

B. Shop Drawings:
   1. Indicate trunk cable schematic showing programmable control unit locations, and trunk data conductors.
   2. List connected data points, including connected control unit and input device.
   3. Indicate system graphics indicating monitored systems, data (connected and calculated) point addresses, and operator notations. Provide demonstration digital media containing graphics.
   4. Show system configuration with peripheral devices, batteries, power supplies, diagrams, modems, and interconnections.
   5. Indicate description and sequence of operation of operating, user, and application software.

C. Project Record Documents: Record actual locations of control components, including control units, thermostats, and sensors.
   1. Revise shop drawings to reflect actual installation and operating sequences.
   2. Include submittals data in final "Record Documents" form.

D. Operation and Maintenance Data:
   1. Include interconnection wiring diagrams complete field installed systems with identified and numbered, system components and devices.
   2. Include keyboard illustrations and step-by-step procedures indexed for each operator function.
   3. Include inspection period, cleaning methods, cleaning materials recommended, and calibration tolerances.

E. Warranty: Submit manufacturer's warranty and ensure forms have been filled out in Owner s name and registered with manufacturer.

1.02 QUALITY ASSURANCE

A. Perform work in accordance with NFPA 70.

B. Manufacturer Qualifications: Company specializing in manufacturing products specified in this section with minimum three years of documented experience.

C. Installer Qualifications: Company specializing in performing work of the type specified and with minimum three years of documented experience.

D. Products Requiring Electrical Connection: Listed and classified by UL (DIR) as suitable for purpose specified and indicated.

1.03 WARRANTY

A. Provide five year manufacturer's warranty for field programmable micro-processor based units.

PART 2 PRODUCTS

2.01 SYSTEM DESCRIPTION

A. Automatic temperature control field monitoring and control system using field programmable micro-processor based units.

B. Base system on distributed system of fully intelligent, stand-alone controllers, operating in a multi-tasking, multi-user environment on token passing network, with central and remote hardware, software, and interconnecting wire and conduit.

C. Include computer software and hardware, operator input/output devices, control units, local area networks (LAN), sensors, control devices, actuators.

D. Controls for variable air volume terminals, radiation, reheat coils, unit heaters, fan coils, and the like when directly connected to the control units. Individual terminal unit control is specified in Section 23 09 13.

E. Provide control systems consisting of thermostats, control valves, dampers and operators, indicating devices, interface equipment and other apparatus and accessories required to operate mechanical systems, and to perform functions specified.

F. Include installation and calibration, supervision, adjustments, and fine tuning necessary for complete and fully operational system.

2.02 HVAC CONTROL PROGRAMS

A. General:
   1. Identify each HVAC Control system.

B. Optimal Run Time:
   1. Control start-up and shutdown times of HVAC equipment for both heating and cooling.
   2. Start-up systems by using outside air temperature, room mass temperatures, and adaptive model prediction for how long building takes to warm up or cool down under different conditions.
   3. Use outside air temperature to determine early shut down with ventilation override.
   4. Analyze multiple building mass sensors to determine seasonal mode and worse case condition for each day.
   5. Operator commands:
      a. Define term schedule.
      b. Add/delete fan status point.
      c. Add/delete outside air temperature point.
      d. Add/delete mass temperature point.
      e. Define heating/cooling parameters.
      f. Define mass sensor heating/cooling parameters.
      g. Lock/unlock program.
      h. Request optimal run time control summary.
      i. Request optimal run time mass temperature summary.
      j. Request HVAC point summary.
      k. Request HVAC saving profile summary.
   6. Control Summary:
      a. HVAC Control system begin/end status.
      b. Optimal run time lock/unlock control status.
      c. Heating/cooling mode status.
      d. Optimal run time schedule.
      e. Start/Stop times.
      f. Selected mass temperature point ID.
      g. Optimal run time system normal start times.
      h. Occupancy and vacancy times.
      i. Optimal run time system heating/cooling mode parameters.
   7. Mass temperature summary:
      a. Mass temperature point type and ID.
      b. Desired and current mass temperature values.
      c. Calculated warm-up/cool-down time for each mass temperature.
      d. Heating/cooling season limits.
      e. Break point temperature for cooling mode analysis.
   8. HVAC point summary:
      a. Control system identifier and status.
      b. Point ID and status.
      c. Outside air temperature point ID and status.
      d. Mass temperature point ID and point.

e. Calculated optimal start and stop times.
f. Period start.

C. Supply Air Reset:
1. Adjust discharge temperatures to most energy efficient levels satisfying measured load by:
a. Raising cooling temperatures to highest possible value.
b. Reducing heating temperatures to lowest possible level.
2. Operator commands:
a. Add/delete fan status point.
b. Lock/unlock program.
c. Request HVAC point summary.
d. Add/Delete discharge controller point.
e. Define discharge controller parameters.
f. Add/delete air flow rate.
g. Define space load and load parameters.
h. Request space load summary.
3. Control summary:
a. HVAC control system status (begin/end).
b. Supply air reset system status.
c. Optimal run time system status.
d. High/low limits.
e. Deadband.
f. Response timer.
g. Reset times.
4. Space load summary:
a. HVAC system status.
b. Optimal run time status.
c. Heating/cooling loop status.
d. Space load point ID.
e. Current space load point value.
f. Control heat/cool limited.
g. Gain factor.
h. Calculated reset values.
i. Fan status point ID and status.
j. Control discharge temperature point ID and status.
k. Space load point ID and status.
l. Air flow rate point ID and status.

D. Enthalpy Switchover:
1. Calculate outside and return air enthalpy using measured temperature and relative humidity; determine energy expended and control outside and return air dampers.
2. Operator commands:
a. Add/delete outside air temperature point.
b. Add/delete discharge controller point.
c. Define discharge controller parameters.
d. Add/delete return air temperature point.
e. Add/delete outside air dew point/humidity point.
f. Add/delete return air dew point/humidity point.
g. Add/delete damper switch.
h. Add/delete minimum outside air.
i. Add/delete atmospheric pressure.
j. Add/delete heating override switch.
k. Add/delete evaporative cooling switch.
l. Add/delete air flow rate.

m. Define enthalpy deadband.
n. Lock/unlock program.
o. Request control summary.
p. Request HVAC point summary.

3. Control summary:
   a. HVAC control system begin/end status.
   b. Enthalpy switchover optimal system status.
   c. Optimal return time system status.
   d. Current outside air enthalpy.
   e. Calculated mixed air enthalpy.
   f. Calculated cooling cool enthalpy using outside air.
   g. Calculated cooling cool enthalpy using mixed air.
   h. Calculated enthalpy difference.
   i. Enthalpy switchover deadband.
   j. Status of damper mode switch.

PART 3 EXECUTION

3.01 EXAMINATION

A. Verify existing conditions before starting work.

B. Verify that conditioned power supply is available to the control units and to the operator work station. Verify that field end devices, wiring, and pneumatic tubing is installed prior to installation proceeding.

3.02 INSTALLATION

A. Install control units and other hardware in position on permanent walls where not subject to excessive vibration.

B. Install software in control units and in operator work station. Implement all features of programs to specified requirements and appropriate to sequence of operation. Refer to Section 23 09 93.

C. Provide conduit and electrical wiring in accordance with Section 26 05 83. Electrical material and installation shall be in accordance with appropriate requirements of Division 26.

3.03 MANUFACTURER'S FIELD SERVICES

A. Start and commission systems. Allow sufficient time for start-up and commissioning prior to placing control systems in permanent operation.

B. Provide basic operator training for 4 persons on data display, alarm and status descriptors, requesting data, execution of commands and request of logs. Include a minimum of 40 hours dedicated instructor time. Provide training on site.

3.04 DEMONSTRATION AND INSTRUCTIONS

A. Demonstrate complete and operating system to Owner.

END OF SECTION 23 09 23

SECTION 23 09 93
SEQUENCE OF OPERATIONS FOR HVAC CONTROLS

PART 1 GENERAL

1.01 SUBMITTALS

A. Sequence of Operation Documentation: Submit written sequence of operation for entire HVAC system and each piece of equipment.
   1. Preface: 1 or 2 paragraph overview narrative of the system describing its purpose, components and function.
   2. Include at least the following sequences:
      a. Start-up.
      b. Warm-up mode.
      c. Normal operating mode.
      d. Unoccupied mode.
      e. Shutdown.
   3. For packaged controlled equipment, include manufacturer's furnished sequence of operation amplified as required to describe the relationship between the packaged controls and the control system, indicating which points are adjustable control points and which points are only monitored.
   4. Include a key to all abbreviations.

B. Control System Diagrams: Submit graphic schematic of the control system showing each control component and each component controlled, monitored, or enabled.
   1. Label with settings, adjustable range of control and limits.
   2. Include flow diagrams for each control system, graphically depicting control logic.
   3. Include draft copies of graphic displays indicating mechanical system components, control system components, and controlled function status and value.
   4. Include all monitoring, control and virtual points specified in elsewhere.
   5. Include a key to all abbreviations.

C. Points List: Submit list of all control points indicating at least the following for each point.
   1. Name of controlled system.
   2. Point abbreviation.
   3. Point description; such as dry bulb temperature, airflow, etc.
   4. Control point or setpoint (Yes / No); i.e. a point that controls equipment and can have its setpoint changed.

D. Project Record Documents: Record actual locations of components and setpoints of controls, including changes to sequences made after submission of shop drawings.

PART 2 PRODUCTS - NOT USED

PART 3 EXECUTION

3.01 SEQUENCE OF OPERATIONS

A. See construction drawings for design sequence of operations.

3.02 SEQUENCE OF OPERATIONS

A. See consruction drawings for design sequence of operations.

END OF SECTION 23 09 93

This page intentionally left blank

SECTION 23 11 23
FACILITY NATURAL-GAS PIPING

PART 1 GENERAL

1.01 SUBMITTALS

A. Product Data: Provide data on pipe materials, pipe fittings, valves, and accessories. Provide manufacturers catalog information. Indicate valve data and ratings.

B. Project Record Documents: Record actual locations of valves.

1.02 QUALITY ASSURANCE

A. Perform work in accordance with applicable codes.

B. Valves: Manufacturer's name and pressure rating marked on valve body.

1.03 DELIVERY, STORAGE, AND HANDLING

A. Accept valves on site in shipping containers with labeling in place. Inspect for damage.

B. Provide temporary end caps and closures on piping and fittings. Maintain in place until installation.

C. Protect piping systems from entry of foreign materials by temporary covers, completing sections of the work, and isolating parts of completed system.

PART 2 PRODUCTS

2.01 NATURAL GAS PIPING, ABOVE GRADE

A. Steel Pipe: ASTM A53/A53M, Grade B, Type F, Schedule 40 black.
   1. Fittings: ASME B16.3, malleable iron, or ASTM A234/A234M, wrought steel welding type.
   2. Joints: Threaded or welded to ASME B31.1.

B. Flexible Gas Piping:
   1. Corrugated Stainless Steel Tubing: Comply with ANSI LC 1/CSA 6.26.
   2. Comply with ASTM E84.
   3. Fittings: Provided by piping system manufacturer.

2.02 FLANGES, UNIONS, AND COUPLINGS

A. Unions for Pipe Sizes 3 Inches and Under:
   1. Ferrous Pipe: Class 150 malleable iron threaded unions.

B. Dielectric Connections: Union with galvanized or plated steel threaded end, copper solder end, water impervious isolation barrier.

2.03 PIPE HANGERS AND SUPPORTS

A. Provide hangers and supports that comply with MSS SP-58.
   1. If type of hanger or support for a particular situation is not indicated, select appropriate type using MSS SP-58 recommendations.
   2. Overhead Supports: Individual steel rod hangers attached to structure or to trapeze hangers.
   3. Trapeze Hangers: Welded steel channel frames attached to structure.
   4. Vertical Pipe Support: Steel riser clamp.

B. Hanger Fasteners: Attach hangers to structure using appropriate fasteners, as follows:
   1. Concrete Wedge Expansion Anchors: Complying with ICC-ES AC193.
   2. Masonry Wedge Expansion Anchors: Complying with ICC-ES AC01.
   3. Concrete Screw Type Anchors: Complying with ICC-ES AC193.
   4. Masonry Screw Type Anchors: Complying with ICC-ES AC106.
   5. Concrete Adhesive Type Anchors: Complying with ICC-ES AC308.
   6. Other Types: As required.

2.04 BALL VALVES

A. Construction, 4 Inches and Smaller: MSS SP-110, Class 150, 400 psi CWP, brass, bronze, or ductile iron body, 304 stainless steel or chrome plated brass ball, regular port, Teflon seats and stuffing box ring, blowout proof stem, lever handle with balancing stops, solder, threaded, or grooved ends with union.

2.05 STRAINERS

A. Size 2 inch and Under:
   1. Threaded brass body for 175 psi CWP, Y pattern with 1/32 inch stainless steel perforated screen.
   2. Class 150, threaded bronze body 300 psi CWP, Y pattern with 1/32 inch stainless steel perforated screen.

2.06 LINE PRESSURE REGULATORS AND APPLIANCE REGULATORS INDICATORS

A. Compliance Requirements:
   1. Appliance Regulator: ANSI Z21.18/CSA 6.3.

B. Materials in Contact With Gas:
   1. Housing: Aluminum, steel (free of non-ferrous metals).
   2. Seals and Diaphragms: NBR-based rubber.

C. Maximum Inlet Operating Pressure: 2 psi .

D. Output Pressure Range: 7 inch wc to 14 inch wc.

PART 3 EXECUTION

3.01 PREPARATION

A. Ream pipe and tube ends. Remove burrs. Bevel plain end ferrous pipe.

B. Remove scale and dirt, on inside and outside, before assembly.

C. Prepare piping connections to equipment with flanges or unions.

3.02 INSTALLATION

A. Install in accordance with manufacturer's instructions.

B. Provide non-conducting dielectric connections wherever jointing dissimilar metals.

C. Route piping in orderly manner and maintain gradient. Route parallel and perpendicular to walls.

D. Group piping whenever practical at common elevations.

E. Provide clearance in hangers and from structure and other equipment for installation of insulation and access to valves and fittings.

F. Where pipe support members are welded to structural building framing, scrape, brush clean, and apply one coat of zinc rich primer to welding.

G. Prepare exposed, unfinished pipe, fittings, supports, and accessories ready for finish painting.
   1. Painting of interior piping systems and components is specified in Section 09 91 23.
   2. Painting of exterior piping systems and components is specified in Section 09 91 13.

H. Install valves with stems upright or horizontal, not inverted.

I. Sleeve pipes passing through partitions, walls and floors.

J. Pipe Hangers and Supports:
   1. Install in accordance with ASME B31.9.
   2. Place hangers within 12 inches of each horizontal elbow.
   3. Use hangers with 1-1/2 inch minimum vertical adjustment. Design hangers for pipe movement without disengagement of supported pipe.

3.03 APPLICATION

A. Install unions downstream of valves and at equipment or apparatus connections.

B. Install ball valves for shut-off and to isolate equipment, part of systems, or vertical risers.

C. Install ball valves for throttling, bypass, or manual flow control services.

END OF SECTION 23 11 23

This page intentionally left blank

SECTION 23 23 00
REFRIGERANT PIPING

PART 1 GENERAL

1.01 SUBMITTALS

A. Product Data: Provide general assembly of specialties, including manufacturer's catalogue information. Provide manufacturer's catalog data including load capacity.

B. Shop Drawings: Indicate schematic layout of system, including equipment, critical dimensions, and sizes.

C. Design Data: Submit design data indicating pipe sizing. Indicate load-carrying capacity of trapeze, multiple pipe, and riser support hangers.

D. Manufacturer's Installation Instructions: Indicate support, connection requirements, and isolation for servicing.

E. Project Record Documents: Record exact locations of equipment and refrigeration accessories on record drawings.

1.02 DELIVERY, STORAGE, AND HANDLING

A. Deliver and store piping and specialties in shipping containers with labeling in place.

B. Protect piping and specialties from entry of contaminating material by leaving end caps and plugs in place until installation.

PART 2 PRODUCTS

2.01 SYSTEM DESCRIPTION

A. Where more than one piping system material is specified ensure system components are compatible and joined to ensure integrity of system is not jeopardized. Provide necessary joining fittings. Ensure flanges, union, and couplings for servicing are consistently provided.

B. Provide pipe hangers and supports in accordance with ASME B31.5 unless indicated otherwise.

C. Valves:
   1. Use service valves on suction and discharge of compressors.

2.02 REGULATORY REQUIREMENTS

A. Comply with ASME B31.9 for installation of piping system.

2.03 PIPING

A. Copper Tube: ASTM B280, H58 hard drawn or O60 soft annealed.
   1. Fittings: ASME B16.22 wrought copper.
   2. Joints: Braze, AWS A5.8M/A5.8 BCuP silver/phosphorus/copper alloy.
   3. Mechanical Press Fittings: Double-pressed type complying with UL 207 and ICC (IMC)-2018.

B. Pipe Supports and Anchors:
   1. Provide hangers and supports that comply with MSS SP-58.
      a. If type of hanger or support for a particular situation is not indicated, select appropriate type using MSS SP-58 recommendations.
   2. Hangers for Pipe Sizes 1/2 to 1-1/2 Inch: Malleable iron adjustable swivel, split ring.
   3. Hangers for Pipe Sizes 2 Inches and Over: Carbon steel, adjustable, clevis.
   4. Multiple or Trapeze Hangers: Steel channels with welded spacers and hanger rods.
   5. Wall Support for Pipe Sizes to 3 Inches: Cast iron hook.
   6. Vertical Support: Steel riser clamp.
   7. Copper Pipe Support: Carbon steel ring, adjustable, copper plated.
   8. Hanger Rods: Mild steel threaded both ends, threaded one end, or continuous threaded.

9. Inserts: Malleable iron case of galvanized steel shell and expander plug for threaded connection with lateral adjustment, top slot for reinforcing rods, lugs for attaching to forms; size inserts to suit threaded hanger rods.

2.04 VALVES

A. Service Valves:
   1. Forged brass body with copper stubs, brass caps, removable valve core, integral ball check valve, flared or soldered ends, for maximum pressure of 500 psi.

PART 3 EXECUTION

3.01 PREPARATION

A. Ream pipe and tube ends. Remove burrs. Bevel plain-end ferrous pipe.

B. Remove scale and dirt on inside and outside before assembly.

C. Prepare piping connections to equipment with flanges or unions.

3.02 INSTALLATION

A. Install refrigeration specialties in accordance with manufacturer's instructions.

B. Route piping in orderly manner, with plumbing parallel to building structure, and maintain gradient.

C. Install piping to conserve building space and avoid interference with use of space.

D. Group piping whenever practical at common elevations and locations. Slope piping one percent in direction of oil return.

E. Install piping to allow for expansion and contraction without stressing pipe, joints, or connected equipment.

F. Pipe Hangers and Supports:
   1. Install in accordance with ASME B31.5.
   2. Install hangers to provide minimum 1/2 inch space between finished covering and adjacent work.
   3. Place hangers within 12 inches of each horizontal elbow.

G. Provide clearance for installation of insulation and access to valves and fittings.

H. Flood piping system with nitrogen when brazing.

I. Insulate piping.

J. Follow ASHRAE Std 15 procedures for charging and purging of systems and for disposal of refrigerant.

K. Fully charge completed system with refrigerant after testing.

3.03 FIELD QUALITY CONTROL

A. Test refrigeration system in accordance with ASME B31.5.

SECTION 23 31 00
HVAC DUCTS AND CASINGS

PART 1 GENERAL

1.01 SUBMITTALS

A. Product Data: Provide data for duct materials.

B. Shop Drawings: Indicate duct fitting types, gauges, sizes, welds, and configuration.

C. Project Record Documents: Record actual locations of ducts and duct fittings. Record changes in fitting location and type. Show additional fittings used.

1.02 FIELD CONDITIONS

A. Do not install duct sealants when temperatures are less than those recommended by sealant manufacturers.

B. Maintain temperatures within acceptable range during and after installation of duct sealants.

PART 2 PRODUCTS

2.01 GENERAL REQUIREMENTS

A. Provide UL Class 1 ductwork, fittings, hangers, supports, and appurtenances in accordance with NFPA 90A and SMACNA (DCS) guidelines unless stated otherwise.

B. Provide metal duct unless otherwise indicated.

C. Acoustical Treatment: Provide sound-absorbing liners and sectional silencers for metal-based ducts in compliance with Section 23 33 19.

D. Seismic Restraint: Fabricate in compliance with ICC (IMC) requirements; see Section 23 05 48.

E. Duct Shape and Material in accordance with Allowed Static Pressure Range:
   1. Round: Plus or minus 2 in-wc of galvanized steel.
   2. Rectangular: Plus or minus 1/2 in-wc of galvanized steel.
   3. Flat Oval: Plus 2 in-wc of galvanized steel.
   4. Flexible Duct (Fabric and wire): Plus or minus 1/2 in-wc; see Section 23 37 00.

F. Duct Sealing and Leakage in accordance with Static Pressure Class:

G. Duct Fabrication Requirements:
   1. Duct and Fitting Fabrication and Support: SMACNA (DCS) including specifics for continuously welded round and oval duct fittings.
   2. No variation of duct configuration or size permitted except by written permission. Size round duct installed in place of rectangular ducts in accordance with ASHRAE (FUND) Handbook - Fundamentals.
   3. Use reinforced and sealed sheet-metal materials at recommended gauges for indicated operating pressures or pressure class.
   4. Construct tees, bends, and elbows with radius of not less than 1-1/2 times width of duct on centerline. Where not possible and where rectangular elbows must be used, provide airfoil turning vanes of perforated metal with glass fiber insulation.
   5. Provide turning vanes of perforated metal with glass fiber insulation when acoustical lining is indicated.
   6. Increase duct sizes gradually, not exceeding 15 degrees divergence wherever possible; maximum 30 degrees divergence upstream of equipment and 45 degrees convergence downstream.
   7. Provide turning vanes of perforated metal with glass fiber insulation when an acoustical lining is required.
   8. Where ducts are connected to exterior wall louvers and duct outlet is smaller than louver frame, provide blank-out panels sealing louver area around duct. Use same material as duct, painted black on exterior side; seal to louver frame and duct.

2.02 METAL DUCTS

A. Material Requirements:
   1. Galvanized Steel: Hot-dipped galvanized steel sheet, ASTM A653/A653M FS Type B, with G60/Z180 coating.

B. Flat-Oval Metal Ducts:
   1. Flat-Oval Single Wall Duct: Machine made from a round spiral lock seam duct.
      a. Fittings: Manufacture at least two gauges heavier metal than the duct.
      b. Provide duct material, gauges, reinforcing, and sealing for operating pressures indicated.

C. Round Metal Ducts:
   1. Round Single Wall Duct: Round lock seam duct with galvanized steel outer wall.
      a. Manufacturers:
         1) Elgen Manufacturing Company, Inc; Snap Lock Pipes and Fittings: www.elgenmfg.com/#sle.
         2) MKT Metal Manufacturing; _____: www.mktduct.com/#sle.
         3) Southwark Metal Manufacturing Co.: https://www.southwarkmetal.com.
   2. Round Double Wall Insulated Duct: Round spiral lock seam duct with galvanized steel outer wall, perforated galvanized steel inner wall; fitting with the solid inner wall.
      a. Insulation:
         1) Thickness: 1 inch.
         2) Material: Air.
      b. Manufacturers:
         1) MKT Metal Manufacturing; Weatherguard: www.mktduct.com/#sle.
   3. Round Connection System: Interlocking duct connection system in accordance with SMACNA (DCS).

D. Round Spiral Duct:
   1. Round spiral lock seam duct with galvanized steel outer wall.
   2. Manufacturers:
      a. Elgen Manufacturing Company, Inc; _____: www.elgenmfg.com/#sle.
      b. MKT Metal Manufacturing; _____: www.mktduct.com/#sle.
      c. Southwark Metal Manufacturing Co.: https://www.southwarkmetal.com.

E. Connectors, Fittings, Sealants, and Miscellaneous:
   1. Fittings: Manufacture with solid inner wall of perforated galvanized steel.
   2. Transverse Duct Connection System: SMACNA "E" rated rigid class connection, interlocking angle and duct edge connection system with sealant, gasket, cleats, and corner clips in accordance with SMACNA (DCS).
   3. Joint Sealers and Sealants: Non-hardening, water resistant, mildew and mold resistant.
      a. Type: Heavy mastic or liquid used alone or with tape, suitable for joint configuration and compatible with substrates, and recommended by manufacturer for pressure class of ducts.
      b. Surface Burning Characteristics: Flame spread index of zero and smoke developed index of zero, when tested in accordance with ASTM E84.
      c. For Use with Flexible Ducts: UL labeled.
   4. Gasket Tape:
      a. Provide butyl rubber gasket tape for a flexible seal between transfer duct connector (TDC), transverse duct flange (TDF), applied flange connections, and angle ring connections.
   5. Hanger Rod: ASTM A36/A36M; steel, galvanized; threaded both ends, threaded one end, or continuously threaded.
   6. Hanger Fasteners: Attach hangers to structure using appropriate fasteners as follows:
      a. Concrete Wedge Expansion Anchors: Complying with ICC-ES AC193.
      b. Masonry Wedge Expansion Anchors: Complying with ICC-ES AC01.

c. Concrete Screw Type Anchors: Complying with ICC-ES AC193.
d. Masonry Screw Type Anchors: Complying with ICC-ES AC106.

2.03 FLEXIBLE DUCTS

A. Flexible Ducts: UL 181, Class 1, polyethylene film, mechanically fastened and rolled using galvanized steel to form spiral helix.
   1. Insulation: R8 insulation with polyethylene vapor barrier film.
   2. Pressure Rating: 10 in-wc positive and 5 in-wc negative.
   3. Maximum Velocity: 5500 fpm.
   4. Temperature Range: Minus 20 degrees F to 250 degrees F.

B. Medium Pressure Flexible Ducts: UL 181, Class 1, aluminized laminate, mechanically fastened and rolled using galvanized steel to form spiral helix.
   1. Insulation: Fiberglass insulation with metallic vapor barrier.
   2. Inner Core: Tri-laminate of polyester, fiberglass, and aluminum foil.
   3. Pressure Rating: 15 in-wc positive and 5 in-wc negative.
   4. Maximum Velocity: 5500 fpm.
   5. Temperature Range: Minus 20 degrees F to 250 degrees F.

PART 3 EXECUTION

3.01 INSTALLATION

A. Install, support, and seal ducts in accordance with SMACNA (DCS).

B. Install products following the manufacturer's instructions.

C. Comply with safety standards NFPA 90A and NFPA 90B.

D. During construction, provide temporary closures of metal or taped polyethylene on open ductwork to prevent construction dust from entering the ductwork system.

E. Increase duct sizes gradually, not exceeding 15 degrees divergence wherever possible; maximum 30 degrees divergence upstream of equipment and 45 degrees convergence downstream.

F. Duct sizes indicated are precise inside dimensions. For lined ducts, maintain sizes inside lining.

G. Provide openings in ductwork as indicated to accommodate thermometers and controllers. Provide pilot tube openings as indicated for testing of systems, complete with metal can with spring device or screw to insure against air leakage. For openings, insulate ductwork and install insulation material inside a metal ring.

H. Locate ducts with sufficient space around equipment to allow normal operating and maintenance activities.

I. Use crimp joints with or without bead for joining round duct sizes 8 inch and smaller with a crimp in the direction of airflow.

J. Use double nuts and lock washers on threaded rod supports.

K. Connect diffusers or light troffer boots to low-pressure ducts directly or with 5 feet maximum length of flexible duct held in place with strap or clamp.

L. At exterior wall louvers, seal duct to louver frame and install blank-out panels.

M. Louver Fit-out:
   1. Provide blank-out panels sealing available area of wall-mounted exterior-faced louver when connected ductwork is smaller than actual louver free area, and duct outlet is smaller than the louver frame.
   2. Use the same duct material painted black on the exterior side, then seal louver frame and duct.

N. Fire Partitions: Provide firestopping sealing. See Section 07 84 00.

O. Duct Insulation: Provide duct insulation. See Section 23 07 13.

3.02 CLEANING

A. Clean duct system by forcing air at high velocity through duct to remove accumulated dust. Clean half the system at a time to obtain sufficient air. Protect equipment that could be harmed by excessive dirt with temporary filters or bypass during cleaning.

END OF SECTION 23 31 00

SECTION 23 33 00
AIR DUCT ACCESSORIES

PART 1 GENERAL

1.01 SUBMITTALS

A. Product Data: Provide for shop-fabricated assemblies including volume control dampers, duct access doors, duct test holes, and hardware used. Include electrical characteristics and connection requirements.

B. Manufacturer's Installation Instructions: Provide instructions for fire dampers.

C. Project Record Drawings: Record actual locations of access doors and test holes.

1.02 QUALITY ASSURANCE

A. Products Requiring Electrical Connection: Listed and classified by Underwriters Laboratories Inc. as suitable for the purpose specified and indicated.

1.03 DELIVERY, STORAGE, AND HANDLING

A. Protect dampers from damage to operating linkages and blades.

PART 2 PRODUCTS

2.01 BACKDRAFT DAMPERS - METAL

A. Multi-Blade, Parallel Action Gravity Balanced Backdraft Dampers: Galvanized steel, with center pivoted blades of maximum 6 inch width, with felt or flexible vinyl sealed edges, linked together in rattle-free manner with 90 degree stop, steel ball bearings, and plated steel pivot pin; adjustment device to permit setting for varying differential static pressure.

2.02 DUCT TEST HOLES

A. Temporary Test Holes: Cut or drill in ducts as required. Cap with neat patches, neoprene plugs, threaded plugs, or threaded or twist-on metal caps.

2.03 FLEXIBLE DUCT CONNECTORS

A. Fabricate in accordance with SMACNA (DCS) and as indicated.

B. Flexible Duct Connections: Fabric crimped into metal edging strip.

2.04 VOLUME CONTROL DAMPERS

A. Multi-Blade Damper: Fabricate consisting of opposed blades. Assemble center- and edge-crimped blades in prime-coated or galvanized-channel frame with suitable hardware.
   1. Blade: 18 gauge, 0.0478 inch, minimum.

PART 3 EXECUTION

3.01 INSTALLATION

A. Install accessories in accordance with manufacturer's instructions, NFPA 90A, and follow SMACNA (DCS). See Section 23 31 00 for duct construction and pressure class.

B. Provide duct test holes where indicated and required for testing and balancing purposes.

C. At fans and motorized equipment associated with ducts, provide flexible duct connections immediately adjacent to the equipment.

D. At equipment supported by vibration isolators, provide flexible duct connections immediately adjacent to the equipment.

E. Provide balancing dampers at points on supply, return, and exhaust systems where branches are taken from larger ducts as required for air balancing. Install minimum two duct widths from duct take-off.

F. Provide balancing dampers on duct take-off to diffusers, grilles, and registers, regardless of whether dampers are specified as part of the diffuser, grille, or register assembly.

END OF SECTION 23 33 00

This page intentionally left blank

SECTION 23 37 00
AIR OUTLETS AND INLETS

PART 1 GENERAL

1.01 SUBMITTALS

A. Product Data: Provide data for equipment required for this project. Review outlets and inlets as to size, finish, and type of mounting prior to submission. Submit schedule of outlets and inlets showing type, size, location, application, and noise level.

PART 2 PRODUCTS

2.01 DUCT-MOUNTED SUPPLY AND RETURN REGISTERS/LOUVERS

A. Type: Duct-mounted, rectangular register for round-spiral duct with adjustable pivot-ended blades, end caps, built-in volume damper, and dual cover flanges to lay flush on duct surface regardless of diameter. Performance to match manufacturer's catalog data.

2.02 WALL EXHAUST AND RETURN REGISTERS/GRILLES

A. Type: Streamlined blades, 3/4 inch minimum depth, 3/4 inch maximum spacing, with spring or other device to set blades, vertical face.

B. Frame: 1-1/4 inch margin with countersunk screw mounting.

C. Fabrication: Steel frames and blades, with factory baked enamel finish.

D. Color: To be selected by Owner from manufacturer's standard range.

PART 3 EXECUTION

3.01 INSTALLATION

A. Install in accordance with manufacturer's instructions.

B. Check location of outlets and inlets and make necessary adjustments in position to comply with architectural features, symmetry, and lighting arrangement.

C. Install diffusers to ductwork with air tight connection.

D. Provide balancing dampers on duct take-off to diffusers and grilles and registers, despite whether dampers are specified as part of diffuser, or grille and register assembly.

3.02 PROTECTION

A. Protect installed products until completion of project.

B. Replace, repair, or touch-up damaged products before Substantial Completion.

END OF SECTION 23 37 00

This page intentionally left blank

SECTION 23 74 16
PACKAGED ROOFTOP AIR-CONDITIONING UNITS

PART 1 GENERAL

1.01 SUBMITTALS

A. Product Data: Provide capacity and dimensions of manufactured products and assemblies required for this project. Indicate electrical service with electrical characteristics and connection requirements, and duct connections.

B. Shop Drawings: Indicate capacity and dimensions of manufactured products and assemblies required for this project. Indicate electrical service with electrical characteristics and connection requirements, and duct connections.

C. Manufacturer's Instructions: Indicate assembly, support details, connection requirements, and include start-up instructions.

D. Operation and Maintenance Data: Include manufacturer's descriptive literature, operating instructions, installation instructions, maintenance and repair data, and parts listing.

E. Warranty: Submit manufacturer's warranty and ensure forms have been filled out in Owner's name and registered with manufacturer.

1.02 QUALITY ASSURANCE

A. Products Requiring Electrical Connection: Listed and classified by Underwriters Laboratories Inc. as suitable for the purpose specified and indicated.

1.03 DELIVERY, STORAGE, AND HANDLING

A. Protect units from physical damage by storing off site until roof mounting curbs are in place and ready for immediate installation of units.

1.04 WARRANTY

A. Provide a five year warranty to include coverage for refrigeration compressors.

PART 2 PRODUCTS

2.01 PACKAGED, INTERMEDIATE-CAPACITY, ROOFTOP AIR-CONDITIONING UNITS

A. General: Roof mounted units having gas burner and electric refrigeration that are 7.5 tons to 25 tons in capacity.

B. Description: Self-contained, packaged, factory assembled and prewired, consisting of cabinet and frame, supply fan, return fan, heat exchanger and burner, heat recovery coil, controls, air filters, refrigerant cooling coil and compressor, condenser coil and condenser fan.

C. Disconnect Switch: Factory mount disconnect switch in control panel.

2.02 CASING

A. Cabinet: Steel with baked enamel finish, including access panels with screwdriver-operated flush, cam type fasteners. Structural members to be minimum 18 gauge, 0.0478 inch, with access doors or panels of minimum 20 gauge, 0.0359 inch.

2.03 FANS

A. Supply Fan: Forward curved centrifugal type, resiliently mounted with V-belt drive, adjustable variable pitch pulley, and rubber isolated hinge mounted. Provide with high efficiency motor or direct drive as indicated. Isolate complete fan assembly. See Section 23 05 48.

2.04 BURNERS

A. Gas Burner: Induced draft type burner with adjustable combustion air supply, pressure regulator, gas valves, manual shut-off, intermittent spark or glow coil ignition, flame-sensing device, and automatic 100 percent shutoff pilot.

B. Gas Burner Safety Controls: Energize ignition, limit time for establishment of flame, prevent opening of gas valve until pilot flame is proven, stop gas flow on ignition failure, energize blower motor, and after airflow proven and slight delay, allow gas valve to open.

C. High Limit Control: Temperature sensor with fixed stop at maximum permissible setting, de-energize burner on excessive bonnet temperature, and energize burner when temperature drops to lower safe value.

2.05 EVAPORATOR COIL

A. Provide copper tube aluminum fin coil assembly with galvanized drain pan and connection.

B. Provide capillary tubes or thermostatic expansion valves for units of 6 tons capacity and less, and thermostatic expansion valves and alternate row circuiting for units 7.5 tons cooling capacity and larger.

2.06 CONDENSER COIL

A. Provide copper tube aluminum fin coil assembly with subcooling rows and coil guard.

B. Provide direct drive propeller fans, resiliently mounted with fan guard, motor overload protection, wired to operate with compressor. Provide high efficiency fan motors.

2.07 COMPRESSORS

A. Provide hermetic compressors, 3600 rpm maximum, resiliently mounted with positive lubrication, crankcase heater, high and low pressure safety controls, motor overload protection, suction and discharge service valves and gauge ports, and filter drier.

B. For heat pump units, provide reversing valve, suction line accumulator, discharge muffler, flow control check valve, and solid-state defrost control utilizing thermistors.

2.08 MIXED AIR CASING

A. Dampers: Provide outside, return, and relief dampers with damper operator and control package to automatically vary outside air quantity. Outside air damper to fall to closed position. Relief dampers may be gravity balanced.

B. Gaskets: Provide tight fitting dampers with edge gaskets.

C. Damper Operator: 24 volts with gear train sealed in oil.

D. Mixed Air Controls: Maintain selected supply air temperature and return dampers to minimum position on call for heating and above 75 degrees F ambient, or when ambient air enthalpy exceeds return air enthalpy.

2.09 AIR FILTERS:

A. 2-inch thick, glass fiber disposable media in metal frames. MERV 8 pre-filter and MERV 13 post-filter.

2.10 OPERATING CONTROLS

A. Provide low voltage, adjustable room thermostat to control burner operation, compressor and condenser fan, and supply fan to maintain temperature setting.
   1. Include system selector switch heat-off-cool and auto-on fan control switch.

B. Provide terminal strip on unit for connection of operating controls to remote panel by others. Control to allow for two stages of heating and two stages cooling.

C. Provide remote-mounted auto-on fan control switch.

D. Provide low-limit thermostat in supply air to close outside air damper and stop supply fan.

E. Provide night control energized by central time clock to maintain lower thermostat setting, lock out refrigeration, close outside air damper and open return air damper, stop supply air fan, for night and unoccupied operation. Provide time delay to maintain outside air damper closed and return air damper open after switching to day and occupied operation.

2.11 OPERATING CONTROLS - VARIABLE VOLUME UNITS

A. Temperature transmitter located in supply air to signal electronic logic panel to control mixing dampers and cooling in sequence. Mixing section to operate as first stage of cooling and revert to minimum outside air above approximately 75 degrees F as determined by enthalpy of return and outdoor air.

B. Control cooling by cycling compressors, cylinder unloading, and hot gas bypass.

C. Control logic to allow supply air reset under low load or airflow conditions.

D. Provide bypass dampers, bypassing air from supply fan discharge to return fan inlet to control duct static pressures. Control operation by sensing current to supply fan motor.

PART 3 EXECUTION

3.01 EXAMINATION

A. Verify that roof is ready to receive work and opening dimensions are as required by manufacturer.

B. Verify that proper power supply is available.

3.02 INSTALLATION

A. Install in accordance with manufacturer's instructions.

B. Install in accordance with NFPA 90A.

C. Mount units on factory built roof mounting curb providing watertight enclosure to protect ductwork and utility services. Install roof mounting curb level.

3.03 SYSTEM STARTUP

A. Prepare and start equipment. Adjust for proper operation.

3.04 CLOSEOUT ACTIVITIES

A. Demonstrate proper operation of equipment to Owner's designated representative.

END OF SECTION 23 74 16

This page intentionally left blank

SECTION 23 81 29
VARIABLE REFRIGERANT FLOW HVAC SYSTEMS

PART 1 GENERAL

1.01 SUBMITTALS

A. Product Data: Submit manufacturer's standard data sheets showing the following for each item of equipment, marked to correlate to equipment item markings indicated in Contract Documents:
   1. Outdoor Units:
      a. Refrigerant Type and Size of Charge.
      b. Output and Input Cooling Capacity: Btu/h.
      c. Output and Input Heating Capacity: Btu/h.
      d. Operating Temperature Range, Cooling and Heating.
      e. Fan Capacity: Flow in cfm with respective fan curves.
      f. External Static Pressure (ESP): In-wc.
      g. Sound Pressure Level: dB(A).
      h. Electrical Data: Complete including motor size.
      i. Maximum number of indoor units that can be served.
      j. Maximum refrigerant piping run from outdoor unit to indoor unit(s).
      k. Maximum height difference between outdoor unit to Indoor unit(s), both above and below.
   2. Indoor Units:
      a. Output and Input Cooling Capacity: Btu/h.
      b. Output and Input Heating Capacity: Btu/h.
      c. Fan Capacity: Flow in cfm with respective fan curves.
      d. External Static Pressure (ESP): In-wc.
      e. Electrical Data: Complete including motor size.
      f. Maximum Lift of Built-in Condensate Pump.
   3. Control Panels: Complete data of controllers, input-output points, and zones.

B. Operating and Maintenance Data:
   1. Manufacturer's complete standard instructions for each unit of equipment and control panel.
   2. Custom-prepared system operation, troubleshooting, and maintenance instructions and recommendations.
   3. Identification of replaceable parts and local source of supply.

C. Warranty: Executed warranty, made out in Owner's name.

D. Specimen Warranty: Copy of manufacturer's warranties.

E. Project Record Documents: Record the following:
   1. As-installed routing of refrigerant piping and condensate piping.
   2. Locations of access panels.
   3. Locations of control panels.

1.02 DELIVERY, STORAGE AND HANDLING

A. Deliver, store, and handle equipment and refrigerant piping according to manufacturer's recommendations.

1.03 WARRANTY

A. Compressors: Provide manufacturer's warranty for 6 years from date of installation.

PART 2 PRODUCTS

2.01 VARIABLE REFRIGERANT FLOW SYSTEM

A. Minimum System Requirements:
   1. System Testing, Capacity Rating, and Performance:

a. AHRI 1230 when cooling capacity is equal or greater than 65,000 Btu/h.
b. AHRI 210/240 when cooling capacity is below 65,000 Btu/h.

2. Safety Certification: Bear UL 1995 tested and ITS (DIR) listed certification label.
3. Outdoor Units: Furnish installation and surface support hardware products in accordance with ASCE 7 for wind restraint.
4. Cooling Mode Interior Performance:
   a. Daytime Setpoint: 68 degrees F, plus or minus 2 degrees F.
   b. Setpoint Range: 57 degrees F to 77 degrees F.
   c. Night Setback: 78 degrees F.
   d. Interior Relative Humidity: 20 percent, maximum.

B. System Design and Installation Considerations:
1. Conditioned spaces and zones are indicated on drawings.
2. Outside unit locations are indicated on drawings.
3. Indoor unit locations are indicated on drawings.
4. Required equipment unit capacities are indicated on drawings.
5. Refrigerant piping sizes are not indicated on drawings.
6. Condensate piping to nearest drain is indicated on drawings.
7. Provide calculations showing ASHRAE Std 15 guideline compliance.

2.02 AIR-SOURCE OUTDOOR UNITS

A. Air Conditioning Type:
1. Manifold two or to three units as recommended by manufacturer to handle sequencing and coordination of multiple indoor units.

B. Unit Cabinet:
1. Capable of being installed with wiring and piping to the left, right, rear or bottom.
2. Designed to allow side-by-side installation with minimum spacing and vibration isolation.
3. Weatherproof and corrosion resistant; rust-proofed mild steel panels coated with baked enamel finish.
4. Sound Pressure Level: 55 dB measured at 3 feet from front of unit.

C. Heat Sink Side:
1. Condenser Fans:
   a. Provide minimum of 2 fans for each condenser within the outdoor unit.
   b. Minimum External Static Pressure: Factory set at 0.12 in-wc.
   c. Fan Type: Vertical discharging, direct-driven propeller type with variable speed operation using DC-controlled ECM motors mechanically connected using permanently lubricated bearings having whole assembly protected with fan guards.
2. Condenser Coils:
   a. Hi-X seamless copper tubes expanded into aluminum fins to form mechanical bond; waffle louver fin and rifled bore tube design to ensure high efficiency performance.

D. Refrigeration Side:
1. Factory assembled and wired with instrumentation, switches, and controller(s) to handle unit specifics with direct coordination of remote controller(s) from indoor unit(s).
2. Refrigeration Circuit: ECM driven dual scroll compressors, fans, condenser heat sink coil, expansion valves, solenoid valves, distribution headers, capillaries, filters, shutoff valves, oil separators, service ports, and refrigerant regulator.
3. Variable Volume Control: Modulate compressed refrigerant capacity automatically to maintain constant suction and condensing pressures under varying refrigerant volume required to handle remote loads. Include defrost control.
4. Provide refrigerant subcooling to ensure the liquid refrigerant does not flash when supplying to use indoor units.
5. Capable of heating operation at low end of operating range as specified, without additional low ambient controls or auxiliary heat source; during heating operation, reverse cycle, oil return, or defrost is not permitted due to potential reduction in space temperature.

6. Power Failure Mode: Automatically restarts operation after power failure without loss of programmed settings.
7. Safety Devices: High pressure sensor with cut-out switch, low pressure sensor with cut-out switch, control circuit fuses, crankcase heaters, fusible plug, overload relay, inverter overload protector, thermal protectors for compressor and fan motors, overcurrent protection for the inverter and antirecycling timers.
8. Oil Recovery Cycle: Automatic, occurring 2 hours after start of operation and then every 8 hours of operation; maintain continuous heating during oil return operation.

E. Local Controls:
1. Include factory-wired instruments, sensors, switches, and safeties for unit control.
2. Configured to coordinate internal unit operation with remote indoor units and with built-in capacity to coordinate other manifolded outdoor units and remote refrigerant branch unit(s).
3. Include screen and button interface to setup operating schedules, setpoints, alarms, and remote unit setpoint coordination. Also used for system troubleshooting.
4. Self diagnostic, auto-check functions to detect malfunctions and display the type and location.

F. BAS, SCADA, or other Integrated Automation Link: ASHRAE Std 135 BACnet IP.

G. Power:
1. Outdoor Mounted: Provide fused NEMA EN 10250 Type 4X disconnect switch.

2.03 REFRIGERANT PIPING

A. Two-Pipe Run: Provide low-pressure vapor and high-pressure vapor gas pipes for each indoor unit selected for seasonal heating or cooling service.

B. Refrigerant Flow Balancing: Provide refrigerant piping joints and headers specifically designed to ensure proper refrigerant balance and flow for optimum system capacity and performance; T-style joints are prohibited.

2.04 INDOOR UNITS

A. Minimum Unit Requirements:
1. DX Evaporator Coil:
a. Copper tubes expanded into aluminum fins to form a mechanical bond; waffle louver fin and high heat exchange, rifled bore tube design; factory tested.
b. 2-, 3-, or 4-row cross fin design with 14 to 17 fins per inch and flare end-connections.
c. Provide thermistor on liquid and gas lines wired into local controller.
d. Refrigerant circuits factory-charged with dehydrated air for field charging.
2. Fan Section:
a. Variable or three-speed ECM fan with automatic airflow adjustment; external static pressure selectable during commissioning.
b. Thermally protected, direct-drive motor with statically and dynamically balanced fan blades.
c. Minimum-adjustable external static pressure 0.32 in-wc; provide for mounting of field-installed ducts.
3. Local Unit Controls:
a. Temperature Control: Return air control using thermistor tied to computerized Proportional-Integral-Derivative (PID) control of superheat.
b. Temperature Zones:
1) Single Indoor Unit: Set served space(s) as the local temperature zone.
2) Multiple Indoor Units: For large zones, group and coordinate related indoor units with served spaces as the local temperature zone with each indoor unit as sub-zone.
c. Additional Temperature Sensors: Provide wall-mounted temperature sensors as indicated on drawings for each indoor unit.

4. Return Air Filter:
    a. Washable long-life net filter with mildew proof resin, unless otherwise indicated.
5. Condensate:
    a. Built-in condensate drain pan with PVC drain connection for drainage.
    b. Units With Built-In Condensate Pumps: Provide condensate safety shutoff and alarm.
    c. Units Without Built-In Condensate Pump: Provide built-in condensate float switch and wiring connections.
6. Cabinet Insulation: Sound absorbing foamed polystyrene and polyethylene insulation.

B. Ceiling-Recessed Cassette, Indoor Units:
1. Ceiling mount, 4-way, 2-way, or 1-way supply air flow units with central return air grill, DX coil, tubed drain pan, and built-in controls with thermostat remotely coordinated by outdoor air unit to maintain local air temperature setpoint.
2. Cabinet Height: Maximum of 10 inches above face of ceiling.
3. Exposed Housing: White, impact resistant, with washable decoration panel.
4. Supply Airflow Adjustment:
    a. Horizontally and vertically adjustable dampers with electronic actuators.
    b. Four-way distribution field-modifiable to 3-way and 2-way airflow.
    c. Three auto-swing positions, including standard, draft prevention and ceiling stain prevention.
5. Return Air Filter: Manufacturer's standard.
6. Sound Pressure Range: Between 28 to 33 dB(A) at low speed measured at 5 feet below the unit.
7. Fan: Direct-drive turbo type, with motor output range of 1/16 to 1/8 hp.
8. Condensate Pump: Built-in with minimum lift of 21 inches.
9. Provide dehumidification control as indicated on drawings.

C. Wall Mounted, Indoor Units:
1. DX coil, tubed drain pan, and built-in controls with thermostat remotely coordinated by outdoor air unit to maintain local air temperature setpoint.
2. Variable or three-speed ECM cross-flow fan with automatic airflow adjustment; external static pressure selectable during commissioning.
3. Return Air Filter: Manufacturer's standard.
4. Provide exposed unit casing with removable front grille; foamed polystyrene and polyethylene sound insulation; wall mounting plate; polystyrene condensate drain pan.
5. Airflow Control: Auto-swing louver that closes automatically when unit stops; five (5) steps of discharge angle, set using remote controller; upon restart, discharge angle defaults to same angle as previous operation.
6. Provide dehumidification control as indicated on drawings.
7. Sound Pressure Range: Measured at low speed at 3.3 feet below and away from unit.
8. Condensate Drain Connection: Back, with piping concealed in wall.

PART 3 EXECUTION

3.01 EXAMINATION

A. Verify that required electrical services have been installed and are in the proper locations prior to starting installation.

B. Verify that condensate piping has been installed and is in the proper location prior to starting installation.

3.02 INSTALLATION

A. Install in accordance with manufacturer's instructions.

B. Install refrigerant piping in accordance with equipment manufacturer's instructions.

C. Perform wiring in accordance with NFPA 70, National Electric Code (NEC).

D. Coordinate with installers of systems and equipment connecting to this system.

E. Connect indoor units to condensate piping.

F. Coordinate BAS, BMS, or Integrated Automation linking between local controller(s) and remote front-end interface; see Section 25 15 00.

3.03 FIELD QUALITY CONTROL

A. Provide manufacturer's field representative to inspect installation prior to startup.

3.04 SYSTEM STARTUP

A. Provide manufacturer's field representative to perform system startup.

B. Prepare and start equipment and system in accordance with manufacturer's instructions and recommendations.

C. Adjust equipment for proper operation within manufacturer's published tolerances.

3.05 CLOSEOUT ACTIVITIES

A. Demonstrate proper operation of equipment to Owner's designated representative.

B. Demonstration: Demonstrate operation of system to Owner's personnel.
   1. Use operation and maintenance data as reference during demonstration.
   2. Briefly describe function, operation, and maintenance of each component.

3.06 PROTECTION

A. Protect installed components from subsequent construction operations.

B. Replace exposed components broken or otherwise damaged beyond repair.

END OF SECTION 23 81 29

This page intentionally left blank

SECTION 26 05 19
LOW-VOLTAGE ELECTRICAL POWER CONDUCTORS AND CABLES

PART 1 GENERAL

1.01 SECTION INCLUDES

A. Single conductor building wire.

B. Wiring connectors.

C. Electrical tape.

D. Wire pulling lubricant.

1.02 REFERENCE STANDARDS

A. ASTM B3 - Standard Specification for Soft or Annealed Copper Wire.

B. ASTM B8 - Standard Specification for Concentric-Lay-Stranded Copper Conductors, Hard, Medium-Hard, or Soft.

C. ASTM B33 - Standard Specification for Tin-Coated Soft or Annealed Copper Wire for Electrical Purposes.

D. ASTM B787/B787M - Standard Specification for 19 Wire Combination Unilay-Stranded Copper Conductors for Subsequent Insulation.

E. ASTM D3005 - Standard Specification for Low-Temperature Resistant Vinyl Chloride Plastic Pressure-Sensitive Electrical Insulating Tape.

F. NECA 1 - Standard for Good Workmanship in Electrical Construction.

G. NEMA WC 70 - Power Cables Rated 2000 Volts or Less for the Distribution of Electrical Energy.

H. NETA ATS - Standard for Acceptance Testing Specifications for Electrical Power Equipment And Systems.

I. NFPA 70 - National Electrical Code.

J. UL 44 - Thermoset-Insulated Wires and Cables.

K. UL 83 - Thermoplastic-Insulated Wires and Cables.

L. UL 267 - Outline of Investigation for Wire-Pulling Compounds.

M. UL 486A-486B - Wire Connectors.

N. UL 486C - Splicing Wire Connectors.

O. UL 486D - Sealed Wire Connector Systems.

P. UL 510 - Polyvinyl Chloride, Polyethylene, and Rubber Insulating Tape.

1.03 ADMINISTRATIVE REQUIREMENTS

A. Coordination:
   1. Coordinate sizes of raceways, boxes, and equipment enclosures installed under other sections with the actual conductors to be installed, including adjustments for conductor sizes increased for voltage drop.
   2. Coordinate with electrical equipment installed under other sections to provide terminations suitable for use with the conductors to be installed.
   3. Notify Engineer of any conflicts with or deviations from Contract Documents. Obtain direction before proceeding with work.

1.04 SUBMITTALS

A. Product Data: Provide manufacturer's standard catalog pages and data sheets for conductors and cables, including detailed information on materials, construction, ratings, listings, and available sizes, configurations, and stranding.

B. Field Quality Control Test Reports.

C. Manufacturer's Installation Instructions: Indicate application conditions and limitations of use stipulated by product testing agency. Include instructions for storage, handling, protection, examination, preparation, and installation of product.

D. Project Record Documents: Record actual installed circuiting arrangements. Record actual routing.

1.05 QUALITY ASSURANCE

A. Comply with requirements of NFPA 70.

B. Maintain at the project site a copy of each referenced document that prescribes execution requirements.

C. Manufacturer Qualifications: Company specializing in manufacturing the products specified in this section with minimum three years documented experience.

D. Product Listing Organization Qualifications: An organization recognized by OSHA as a Nationally Recognized Testing Laboratory (NRTL) and acceptable to authorities having jurisdiction.

1.06 DELIVERY, STORAGE, AND HANDLING

A. Receive, inspect, handle, and store conductors and cables in accordance with manufacturer's instructions.

1.07 FIELD CONDITIONS

A. Do not install or otherwise handle thermoplastic-insulated conductors at temperatures lower than 14 degrees F, unless otherwise permitted by manufacturer's instructions. When installation below this temperature is unavoidable, notify Engineer and obtain direction before proceeding with work.

PART 2 PRODUCTS

2.01 CONDUCTOR AND CABLE APPLICATIONS

A. Do not use conductors and cables for applications other than as permitted by NFPA 70 and product listing.

B. Provide single conductor building wire installed in suitable raceway unless otherwise indicated, permitted, or required.

2.02 CONDUCTOR AND CABLE GENERAL REQUIREMENTS

A. Provide products that comply with requirements of NFPA 70.

B. Provide products listed, classified, and labeled as suitable for the purpose intended.

C. Provide new conductors and cables manufactured not more than one year prior to installation.

D. Unless specifically indicated to be excluded, provide all required conduit, boxes, wiring, connectors, etc. as required for a complete operating system.

E. Comply with NEMA WC 70.

F. Thermoplastic-Insulated Conductors and Cables: Listed and labeled as complying with UL 83.

G. Thermoset-Insulated Conductors and Cables: Listed and labeled as complying with UL 44.

H. Conductor Material:
   1. Provide copper conductors only. Aluminum conductors are not acceptable for this project. Conductor sizes indicated are based on copper.
   2. Copper Conductors: Soft drawn annealed, 98 percent conductivity, uncoated copper conductors complying with ASTM B3, ASTM B8, or ASTM B787/B787M unless otherwise indicated.
   3. Tinned Copper Conductors: Comply with ASTM B33.

I. Minimum Conductor Size:
   1. Branch Circuits: 12 AWG.
      a. Exceptions:

1) 20 A, 120 V circuits longer than 75 feet: 10 AWG, for voltage drop.
2) 20 A, 120 V circuits longer than 150 feet: 8 AWG, for voltage drop.

2. Control Circuits: 14 AWG.

J. Where conductor size is not indicated, size to comply with NFPA 70 but not less than applicable minimum size requirements specified.

K. Conductor Color Coding:
1. Color code conductors as indicated unless otherwise required by the authority having jurisdiction. Maintain consistent color coding throughout project.
2. Color Coding Method: Integrally colored insulation.
a. Conductors size 4 AWG and larger may have black insulation color coded using vinyl color coding electrical tape.
3. Color Code:
a. 208Y/120 V, 3 Phase, 4 Wire System:
1) Phase A: Black.
2) Phase B: Red.
3) Phase C: Blue.
4) Neutral/Grounded: White.
b. Equipment Ground, All Systems: Green.

2.03 SINGLE CONDUCTOR BUILDING WIRE

A. Description: Single conductor insulated wire.

B. Conductor Stranding:
1. Feeders and Branch Circuits:
a. Size 10 AWG and Smaller: Solid.
b. Size 8 AWG and Larger: Stranded.

C. Insulation Voltage Rating: 600 V.

D. Insulation:
1. Copper Building Wire: Type THHN/THWN or THHN/THWN-2, except as indicated below.
a. Size 4 AWG and Larger: Type XHHW-2.

2.04 WIRING CONNECTORS

A. Description: Wiring connectors appropriate for the application, suitable for use with the conductors to be connected, and listed as complying with UL 486A-486B or UL 486C as applicable.

B. Wiring Connectors for Splices and Taps:
1. Copper Conductors Size 8 AWG and Smaller: Use twist-on insulated spring connectors.
2. Copper Conductors Size 6 AWG and Larger: Use mechanical connectors or compression connectors.

C. Wiring Connectors for Terminations:
1. Provide terminal lugs for connecting conductors to equipment furnished with terminations designed for terminal lugs.
2. Provide compression adapters for connecting conductors to equipment furnished with mechanical lugs when only compression connectors are specified.
3. Copper Conductors Size 8 AWG and Larger: Use mechanical connectors or compression connectors where connectors are required.
4. Stranded Conductors Size 10 AWG and Smaller: Use crimped terminals for connections to terminal screws.

D. Do not use insulation-piercing or insulation-displacement connectors designed for use with conductors without stripping insulation.

E. Do not use push-in wire connectors as a substitute for twist-on insulated spring connectors.

F. Twist-on Insulated Spring Connectors: Rated 600 V, 221 degrees F for standard applications and 302 degrees F for high temperature applications; pre-filled with sealant and listed as complying with UL 486D for damp and wet locations.

G. Mechanical Connectors: Provide bolted type or set-screw type.

H. Compression Connectors: Provide circumferential type or hex type crimp configuration.

I. Crimped Terminals: Nylon-insulated, with insulation grip and terminal configuration suitable for connection to be made.

2.05 ACCESSORIES

A. Electrical Tape:
   1. Vinyl Color Coding Electrical Tape: Integrally colored to match color code indicated; listed as complying with UL 510; minimum thickness of 7 mil; resistant to abrasion, corrosion, and sunlight; suitable for continuous temperature environment up to 221 degrees F.
   2. Vinyl Insulating Electrical Tape: Complying with ASTM D3005 and listed as complying with UL 510; minimum thickness of 7 mil; resistant to abrasion, corrosion, and sunlight; conformable for application down to 0 degrees F and suitable for continuous temperature environment up to 221 degrees F.

B. Wire Pulling Lubricant:
   1. Listed and labeled as complying with UL 267.
   2. Suitable for use with conductors/cables and associated insulation/jackets to be installed.
   3. Suitable for use at installation temperature.

PART 3 EXECUTION

3.01 EXAMINATION

A. Verify that work likely to damage wire and cable has been completed.

B. Verify that raceways, boxes, and equipment enclosures are installed and are properly sized to accommodate conductors and cables in accordance with NFPA 70.

C. Verify that field measurements are as indicated.

D. Verify that conditions are satisfactory for installation prior to starting work.

3.02 PREPARATION

A. Clean raceways thoroughly to remove foreign materials before installing conductors and cables.

3.03 INSTALLATION

A. Circuiting Requirements:
   1. Unless dimensioned, circuit routing indicated is diagrammatic.
   2. When circuit destination is indicated without specific routing, determine exact routing required.
   3. Arrange circuiting to minimize splices.
   4. Common Neutrals: Unless otherwise indicated, sharing of neutral/grounded conductors among single phase branch circuits of different phases installed in the same raceway is not permitted. Provide dedicated neutral/grounded conductor for each individual branch circuit.

B. Install products in accordance with manufacturer's instructions.

C. Perform work in accordance with NECA 1 (general workmanship).

D. Installation in Raceway:
   1. Tape ends of conductors and cables to prevent infiltration of moisture and other contaminants.
   2. Pull all conductors and cables together into raceway at same time.
   3. Do not damage conductors and cables or exceed manufacturer's recommended maximum pulling tension and sidewall pressure.

4. Use suitable wire pulling lubricant where necessary, except when lubricant is not recommended by the manufacturer.

E. Paralleled Conductors: Install conductors of the same length and terminate in the same manner.

F. Secure and support conductors and cables in accordance with NFPA 70 using suitable supports and methods approved by the authority having jurisdiction. Provide independent support from building structure. Do not provide support from raceways, piping, ductwork, or other systems.

G. Neatly train and bundle conductors inside boxes, wireways, panelboards and other equipment enclosures.

H. Group or otherwise identify neutral/grounded conductors with associated ungrounded conductors inside enclosures in accordance with NFPA 70.

I. Make wiring connections using specified wiring connectors.
   1. Make splices and taps only in accessible boxes. Do not pull splices into raceways or make splices in conduit bodies or wiring gutters.
   2. Remove appropriate amount of conductor insulation for making connections without cutting, nicking or damaging conductors.
   3. Do not remove conductor strands to facilitate insertion into connector.
   4. Clean contact surfaces on conductors and connectors to suitable remove corrosion, oxides, and other contaminates. Do not use wire brush on plated connector surfaces.
   5. Mechanical Connectors: Secure connections according to manufacturer's recommended torque settings.
   6. Compression Connectors: Secure connections using manufacturer's recommended tools and dies.

J. Insulate splices and taps that are made with uninsulated connectors using methods suitable for the application, with insulation and mechanical strength at least equivalent to unspliced conductors.

K. Insulate ends of spare conductors using vinyl insulating electrical tape.

L. Field-Applied Color Coding: Where vinyl color coding electrical tape is used in lieu of integrally colored insulation as permitted in Part 2 under "Color Coding", apply half overlapping turns of tape at each termination and at each location conductors are accessible.

M. Unless specifically indicated to be excluded, provide final connections to all equipment and devices, including those furnished by others, as required for a complete operating system.

3.04 FIELD QUALITY CONTROL

A. Inspect and test in accordance with NETA ATS, except Section 4.

B. Perform inspections and tests listed in NETA ATS, Section 7.3.2. The insulation resistance test is required for all conductors. The resistance test for parallel conductors listed as optional is not required.

C. Correct deficiencies and replace damaged or defective conductors and cables.

END OF SECTION 26 05 19

This page intentionally left blank

SECTION 26 05 29
HANGERS AND SUPPORTS FOR ELECTRICAL SYSTEMS

PART 1 GENERAL

1.01 SECTION INCLUDES

A. Support and attachment requirements and components for equipment, conduit, cable, boxes, and other electrical work.

1.02 RELATED REQUIREMENTS

A. Section 26 05 33.13 - Conduit for Electrical Systems: Additional support and attachment requirements for conduits.

B. Section 26 05 33.16 - Boxes for Electrical Systems: Additional support and attachment requirements for boxes.

1.03 ADMINISTRATIVE REQUIREMENTS

A. Coordination:
   1. Coordinate sizes and arrangement of supports and bases with actual equipment and components to be installed.
   2. Coordinate work to provide additional framing and materials required for installation.
   3. Coordinate compatibility of support and attachment components with mounting surfaces at installed locations.
   4. Coordinate arrangement of supports with ductwork, piping, equipment and other potential conflicts.
   5. Notify Engineer of conflicts with or deviations from Contract Documents. Obtain direction before proceeding with work.

1.04 SUBMITTALS

A. Product Data: Provide manufacturer's standard catalog pages and data sheets for channel/strut framing systems, nonpenetrating rooftop supports, and post-installed concrete/masonry anchors.

B. Installer's qualification statement.

C. Manufacturer's Instructions: Indicate application conditions and limitations of use stipulated by product testing agency. Include instructions for storage, handling, protection, examination, preparation, and installation of product.

1.05 QUALITY ASSURANCE

A. Maintain at project site one copy of each referenced document that prescribes execution requirements.

B. Installer Qualifications for Powder-Actuated Fasteners: Certified by fastener system manufacturer with current operator's license.

C. Product Listing Organization Qualifications: Organization recognized by OSHA as Nationally Recognized Testing Laboratory (NRTL) and acceptable to authorities having jurisdiction.

1.06 DELIVERY, STORAGE, AND HANDLING

A. Receive, inspect, handle, and store products in accordance with manufacturer's instructions.

PART 2 PRODUCTS

2.01 SUPPORT AND ATTACHMENT COMPONENTS

A. General Requirements:
   1. Comply with the following. Where requirements differ, comply with most stringent.
      a. NFPA 70.
      b. Requirements of authorities having jurisdiction.
   2. Provide required hangers, supports, anchors, fasteners, fittings, accessories, and hardware as necessary for complete installation of electrical work.

3. Provide products listed, classified, and labeled as suitable for purpose intended, where applicable.
4. Where support and attachment component types and sizes are not indicated, select in accordance with manufacturer's application criteria as required for load to be supported with minimum safety factor of 25%. Include consideration for vibration, equipment operation, and shock loads where applicable.
5. Do not use products for applications other than as permitted by NFPA 70 and product listing.
6. Steel Components: Use corrosion-resistant materials suitable for environment where installed.
    a. Zinc-Plated Steel: Electroplated in accordance with ASTM B633.
    b. Galvanized Steel: Hot-dip galvanized after fabrication in accordance with ASTM A123/A123M or ASTM A153/A153M.

B. Conduit and Cable Supports: Straps and clamps suitable for conduit or cable to be supported.
1. Conduit Straps: One-hole or two-hole type; steel or malleable iron.
2. Conduit Clamps: Bolted type unless otherwise indicated.

C. Outlet Box Supports: Hangers and brackets suitable for boxes to be supported.

D. Metal Channel/Strut Framing Systems:
1. Description: Factory-fabricated, continuous-slot, metal channel/strut and associated fittings, accessories, and hardware required for field assembly of supports.
2. Comply with MFMA-4.

E. Hanger Rods: Threaded, zinc-plated steel unless otherwise indicated.

F. Anchors and Fasteners:
1. Unless otherwise indicated and where not otherwise restricted, use anchor and fastener types indicated for specified applications.

PART 3 EXECUTION

3.01 EXAMINATION

A. Verify that field measurements are as indicated.

B. Verify that mounting surfaces are ready to receive support and attachment components.

C. Verify that conditions are satisfactory for installation prior to starting work.

3.02 INSTALLATION

A. Install products in accordance with manufacturer's instructions.

B. Install hangers and supports in accordance with NECA 1.

C. Provide independent support from building structure. Do not provide support from piping, ductwork, or other systems.

D. Unless specifically indicated or approved by Engineer, do not provide support from suspended ceiling support system or ceiling grid.

E. Unless specifically indicated or approved by Engineer, do not provide support from roof deck.

F. Do not penetrate or otherwise notch or cut structural members without approval of Structural Engineer.

G. Equipment Support and Attachment:
1. Use metal, fabricated supports or supports assembled from metal channel/strut to support equipment as required.
2. Use metal channel/strut secured to studs to support equipment surface mounted on hollow stud walls when wall strength is not sufficient to resist pull-out.
3. Use metal channel/strut to support surface-mounted equipment in wet or damp locations to provide space between equipment and mounting surface.

4. Securely fasten floor-mounted equipment. Do not install equipment such that it relies on its own weight for support.

H. Conduit Support and Attachment: See Section 26 05 33.13 for additional requirements.

I. Box Support and Attachment: See Section 26 05 33.16 for additional requirements.

J. Secure fasteners in accordance with manufacturer's recommended torque settings.

K. Remove temporary supports.

3.03 FIELD QUALITY CONTROL

A. Inspect support and attachment components for damage and defects.

B. Repair cuts and abrasions in galvanized finishes using zinc-rich paint recommended by manufacturer. Replace components that exhibit signs of corrosion.

C. Correct deficiencies and replace damaged or defective support and attachment components.

END OF SECTION 26 05 29

This page intentionally left blank

SECTION 26 05 33.13
CONDUIT FOR ELECTRICAL SYSTEMS

PART 1 GENERAL

1.01 SECTION INCLUDES

A. Galvanized steel rigid metal conduit (RMC).

B. Flexible metal conduit (FMC).

C. Liquidtight flexible metal conduit (LFMC).

D. Galvanized steel electrical metallic tubing (EMT).

E. Liquidtight flexible nonmetallic conduit (LFNC).

1.02 RELATED REQUIREMENTS

A. Section 26 05 29 - Hangers and Supports for Electrical Systems.

1.03 REFERENCE STANDARDS

A. ANSI C80.1 - American National Standard for Electrical Rigid Steel Conduit (ERSC).

B. ANSI C80.3 - American National Standard for Electrical Metallic Tubing -- Steel (EMT-S).

C. NECA 1 - Standard for Good Workmanship in Electrical Construction.

D. NECA 101 - Standard for Installing Steel Conduits (Rigid, IMC, EMT).

E. NECA 111 - Standard for Installing Nonmetallic Raceways (RNC, ENT, LFNC).

F. NEMA FB 1 - Fittings, Cast Metal Boxes, and Conduit Bodies for Conduit, Electrical Metallic Tubing, and Cable.

G. NFPA 70 - National Electrical Code.

H. UL 1 - Flexible Metal Conduit.

I. UL 6 - Electrical Rigid Metal Conduit-Steel.

J. UL 360 - Liquid-Tight Flexible Metal Conduit.

K. UL 514B - Conduit, Tubing, and Cable Fittings.

L. UL 797 - Electrical Metallic Tubing-Steel.

M. UL 1660 - Liquid-Tight Flexible Nonmetallic Conduit.

1.04 ADMINISTRATIVE REQUIREMENTS

A. Coordination:
   1. Coordinate minimum sizes of conduits with actual type and quantity of conductors to be installed, including adjustments for conductor sizes increased for voltage drop.
   2. Coordinate arrangement of conduits with structural members, ductwork, piping, equipment, and other potential conflicts.
   3. Verify exact conduit termination locations required for boxes, enclosures, and equipment.
   4. Notify Engineer of conflicts with or deviations from Contract Documents. Obtain direction before proceeding with work.

B. Sequencing:
   1. Do not begin installation of conductors and cables until installation of conduit between termination points is complete.

1.05 SUBMITTALS

A. Product Data: Provide manufacturer's standard catalog pages and data sheets for conduits and fittings.

B. Project Record Documents: Record actual routing for conduits.

1.06 QUALITY ASSURANCE

A. Documents at Project Site: Maintain at project site one copy of manufacturer's instructions and shop drawings.

B. Product Listing Organization Qualifications: Organization recognized by OSHA as Nationally Recognized Testing Laboratory (NRTL) and acceptable to authorities having jurisdiction.

1.07 DELIVERY, STORAGE, AND HANDLING

A. Receive, inspect, handle, and store conduit and fittings in accordance with manufacturer's instructions.

PART 2 PRODUCTS

2.01 CONDUIT APPLICATIONS

A. Do not use conduit and associated fittings for applications other than as permitted by NFPA 70, manufacturer's instructions, and product listing.

B. Unless otherwise indicated and where not otherwise restricted, use conduit types indicated for specified applications. Where more than one listed application applies, comply with most restrictive requirements. Where conduit type for particular application is not specified, use galvanized steel rigid metal conduit.

2.02 CONDUIT - GENERAL REQUIREMENTS

A. Comply with NFPA 70.

B. Existing Work: Where existing conduits are indicated to be reused, they may be reused only where they comply with specified requirements, are free from corrosion, and integrity is verified by pulling mandrel through them.

C. Provide conduit, fittings, supports, and accessories required for complete raceway system.

D. Provide products listed, classified, and labeled as suitable for purpose intended.

E. Minimum Conduit Size, Unless Otherwise Indicated:
   1. Branch Circuits: 3/4-inch trade size.

F. Where conduit size is not indicated, size to comply with NFPA 70 but not less than applicable minimum size requirements specified.

2.03 GALVANIZED STEEL RIGID METAL CONDUIT (RMC)

A. Description: NFPA 70, Type RMC galvanized steel rigid metal conduit complying with ANSI C80.1 and listed and labeled as complying with UL 6.

B. Fittings:
   1. Nonhazardous Locations: Use fittings complying with NEMA FB 1 and listed and labeled as complying with UL 514B or UL 6.
   2. Material: Use steel or malleable iron.
   3. Connectors and Couplings: Use threaded type fittings only. Threadless fittings, including set screw and compression/gland types, are not permitted.

2.04 FLEXIBLE METAL CONDUIT (FMC)

A. Description: NFPA 70, Type FMC standard-wall steel flexible metal conduit listed and labeled as complying with UL 1, and listed for use in classified firestop systems.

B. Fittings:
   1. Description: Fittings complying with NEMA FB 1 and listed and labeled as complying with UL 514B.
   2. Material: Use steel or malleable iron.

2.05 LIQUIDTIGHT FLEXIBLE METAL CONDUIT (LFMC)

A. Description: NFPA 70, Type LFMC polyvinyl chloride (PVC) jacketed steel flexible metal conduit listed and labeled as complying with UL 360.

B. Fittings:
   1. Description: Fittings complying with NEMA FB 1 and listed and labeled as complying with UL 514B.
   2. Material: Use steel or malleable iron.

2.06 GALVANIZED STEEL ELECTRICAL METALLIC TUBING (EMT)

A. Description: NFPA 70, Type EMT galvanized steel electrical metallic tubing complying with ANSI C80.3 and listed and labeled as complying with UL 797.

B. Fittings:
   1. Description: Fittings complying with NEMA FB 1 and listed and labeled as complying with UL 514B.
   2. Material: Use steel or malleable iron.
   3. Connectors and Couplings: Use compression/gland or set-screw type.
      a. Do not use indenter type connectors and couplings.

2.07 LIQUIDTIGHT FLEXIBLE NONMETALLIC CONDUIT (LFNC)

A. Description: NFPA 70, Type LFNC liquidtight flexible nonmetallic conduit listed and labeled as complying with UL 1660.

B. Fittings:
   1. Manufacturer: Same as manufacturer of conduit to be connected.
   2. Description: Fittings complying with NEMA FB 1 and listed and labeled as complying with UL 514B; suitable for type of conduit to be connected.

PART 3 EXECUTION

3.01 EXAMINATION

A. Verify that field measurements are as indicated.

B. Verify that mounting surfaces are ready to receive conduits.

C. Verify that conditions are satisfactory for installation prior to starting work.

3.02 INSTALLATION

A. Install products in accordance with manufacturer's instructions.

B. Install conduit in accordance with NECA 1.

C. Galvanized Steel Rigid Metal Conduit (RMC): Install in accordance with NECA 101.

D. Liquidtight Flexible Nonmetallic Conduit (LFNC): Install in accordance with NECA 111.

E. Conduit Routing:
   1. Unless dimensioned, conduit routing indicated is diagrammatic.
   2. When conduit destination is indicated without specific routing, determine exact routing required.
   3. Conceal conduits unless specifically indicated to be exposed.
   4. Arrange conduit to maintain adequate headroom, clearances, and access.
   5. Arrange conduit to provide no more than equivalent of four 90-degree bends between pull points.
   6. Arrange conduit to provide no more than 150 feet between pull points.
   7. Route conduits above water and drain piping where possible.
   8. Arrange conduit to prevent moisture traps. Provide drain fittings at low points and at sealing fittings where moisture may collect.
   9. Maintain minimum clearance of 6 inches between conduits and piping for other systems.
   10. Maintain minimum clearance of 12 inches between conduits and hot surfaces.

F. Conduit Support:
   1. Secure and support conduits in accordance with NFPA 70 using suitable supports and methods approved by authorities having jurisdiction; see Section 26 05 29.

2. Provide independent support from building structure. Do not provide support from piping, ductwork, or other systems.

G. Connections and Terminations:
   1. Use approved zinc-rich paint or conduit joint compound on field-cut threads of galvanized steel conduits prior to making connections.
   2. Where two threaded conduits must be joined and neither can be rotated, use three-piece couplings or split couplings. Do not use running threads.
   3. Use suitable adapters where required to transition from one type of conduit to another.
   4. Provide drip loops for liquidtight flexible conduit connections to prevent drainage of liquid into connectors.
   5. Terminate threaded conduits in boxes and enclosures using threaded hubs or double lock nuts for dry locations and raintight hubs for wet locations.
   6. Provide insulating bushings, insulated throats, or listed metal fittings with smooth, rounded edges at conduit terminations to protect conductors.
   7. Secure joints and connections to provide mechanical strength and electrical continuity.

H. Penetrations:
   1. Do not penetrate or otherwise notch or cut structural members, including footings and grade beams, without approval of Structural Engineer.
   2. Make penetrations perpendicular to surfaces unless otherwise indicated.
   3. Provide sleeves for penetrations as indicated or as required to facilitate installation. Set sleeves flush with exposed surfaces unless otherwise indicated or required.
   4. Conceal bends for conduit risers emerging above ground.
   5. Where conduits penetrate waterproof membrane, seal as required to maintain integrity of membrane.
   6. Make penetrations for roof-mounted equipment within associated equipment openings and curbs where possible to minimize roofing system penetrations. Where penetrations are necessary, seal as indicated or as required to preserve integrity of roofing system and maintain roof warranty.

I. Conduit Movement Provisions: Where conduits are subject to movement, provide expansion and expansion/deflection fittings to prevent damage to enclosed conductors or connected equipment. This includes, but is not limited to:
   1. Where conduits cross structural joints intended for expansion, contraction, or deflection.
   2. Where conduits are subject to earth movement by settlement or frost.

J. Conduit Sealing:
   1. Use foam conduit sealant to prevent entry of moisture and gases. This includes, but is not limited to:
      a. Where conduits enter building from outside.
      b. Where service conduits enter building from underground distribution system.
      c. Where conduits enter building from underground.
      d. Where conduits may transport moisture to contact live parts.
   2. Where conduits cross barriers between areas of potential substantial temperature differential, use foam conduit sealant at accessible point near penetration to prevent condensation. This includes, but is not limited to:
      a. Where conduits pass from outdoors into conditioned interior spaces.
      b. Where conduits pass from unconditioned interior spaces into conditioned interior spaces.

3.03 FIELD QUALITY CONTROL

A. Repair cuts and abrasions in galvanized finishes using zinc-rich paint recommended by manufacturer. Replace components that exhibit signs of corrosion.

B. Correct deficiencies and replace damaged or defective conduits.

3.04 CLEANING

A. Clean interior of conduits to remove moisture and foreign matter.

END OF SECTION 26 05 33.13

This page intentionally left blank

SECTION 26 05 33.16
BOXES FOR ELECTRICAL SYSTEMS

PART 1 GENERAL

1.01 SECTION INCLUDES

A. Outlet and device boxes up to 100 cubic inches, including those used as junction and pull boxes.

B. Cabinets and enclosures, including junction and pull boxes larger than 100 cubic inches.

1.02 RELATED REQUIREMENTS

A. Section 26 05 29 - Hangers and Supports for Electrical Systems.

B. Section 26 05 33.13 - Conduit for Electrical Systems:
   1. Conduit bodies and other fittings.
   2. Additional requirements for locating boxes to limit conduit length and/or number of bends between pulling points.

1.03 REFERENCE STANDARDS

A. NECA 1 - Standard for Good Workmanship in Electrical Construction.

B. NECA 130 - Standard for Installing and Maintaining Wiring Devices.

C. NEMA EN 10250 - Enclosures for Electrical Equipment (1000 Volts Maximum).

D. NEMA FB 1 - Fittings, Cast Metal Boxes, and Conduit Bodies for Conduit, Electrical Metallic Tubing, and Cable.

E. NEMA OS 1 - Sheet-Steel Outlet Boxes, Device Boxes, Covers, and Box Supports.

F. NFPA 70 - National Electrical Code.

G. UL 50 - Enclosures for Electrical Equipment, Non-Environmental Considerations.

H. UL 50E - Enclosures for Electrical Equipment, Environmental Considerations.

I. UL 508A - Industrial Control Panels.

J. UL 514A - Metallic Outlet Boxes.

1.04 ADMINISTRATIVE REQUIREMENTS

A. Coordination:
   1. Coordinate the work with other trades to avoid placement of ductwork, piping, equipment, or other potential obstructions within the dedicated equipment spaces and working clearances for electrical equipment required by NFPA 70.
   2. Coordinate arrangement of electrical equipment with the dimensions and clearance requirements of the actual equipment to be installed.
   3. Coordinate minimum sizes of boxes with the actual installed arrangement of conductors, clamps, support fittings, and devices, calculated according to NFPA 70.
   4. Coordinate minimum sizes of pull boxes with the actual installed arrangement of connected conduits, calculated according to NFPA 70.
   5. Coordinate the work with other trades to preserve insulation integrity.
   6. Notify Engineer of any conflicts with or deviations from Contract Documents. Obtain direction before proceeding with work.

1.05 SUBMITTALS

A. Product Data: Provide manufacturer's standard catalog pages and data sheets for outlet and device boxes, junction and pull boxes, and cabinets and enclosures.

B. Manufacturer's Installation Instructions: Indicate application conditions and limitations of use stipulated by product testing agency. Include instructions for storage, handling, protection, examination, preparation, and installation of product.

C. Project Record Documents: Record actual locations for outlet and device boxes, junction boxes, and pull boxes.

1.06 QUALITY ASSURANCE

A. Maintain at the project site a copy of each referenced document that prescribes execution requirements.

B. Product Listing Organization Qualifications: An organization recognized by OSHA as a Nationally Recognized Testing Laboratory (NRTL) and acceptable to authorities having jurisdiction.

1.07 DELIVERY, STORAGE, AND HANDLING

A. Receive, inspect, handle, and store products in accordance with manufacturer's instructions.

PART 2 PRODUCTS

2.01 BOXES

A. General Requirements:
   1. Do not use boxes and associated accessories for applications other than as permitted by NFPA 70 and product listing.
   2. Provide all boxes, fittings, supports, and accessories required for a complete raceway system and to accommodate devices and equipment to be installed.
   3. Provide products listed, classified, and labeled as suitable for the purpose intended.
   4. Where box size is not indicated, size to comply with NFPA 70 but not less than applicable minimum size requirements specified.
   5. Provide grounding terminals within boxes where equipment grounding conductors terminate.

B. Outlet and Device Boxes Up to 100 cubic inches, Including Those Used as Junction and Pull Boxes:
   1. Use sheet-steel boxes for dry locations unless otherwise indicated or required.
   2. Use cast iron boxes or cast aluminum boxes for damp or wet locations unless otherwise indicated or required; furnish with compatible weatherproof gasketed covers.
   3. Sheet-Steel Boxes: Comply with NEMA OS 1, and list and label as complying with UL 514A.
   4. Cast Metal Boxes: Comply with NEMA FB 1, and list and label as complying with UL 514A; furnish with threaded hubs.
   5. Boxes for Ganged Devices: Use multigang boxes of single-piece construction. Do not use field-connected gangable boxes unless specifically indicated or permitted.

C. Cabinets and Enclosures, Including Junction and Pull Boxes Larger Than 100 cubic inches:
   1. Comply with NEMA EN 10250, and list and label as complying with UL 50 and UL 50E, or UL 508A.
   2. NEMA EN 10250 Environment Type, Unless Otherwise Indicated:
   3. Junction and Pull Boxes Larger Than 100 cubic inches:
      a. Provide hinged-cover enclosures unless otherwise indicated.

PART 3 EXECUTION

3.01 EXAMINATION

A. Verify that field measurements are as indicated.

B. Verify that mounting surfaces are ready to receive boxes.

C. Verify that conditions are satisfactory for installation prior to starting work.

3.02 INSTALLATION

A. Install products in accordance with manufacturer's instructions.

B. Install boxes in accordance with NECA 1 (general workmanship) and, where applicable, NECA 130, including mounting heights specified in those standards where mounting heights are not indicated.

C. Arrange equipment to provide minimum clearances in accordance with manufacturer's instructions and NFPA 70.

D. Box Locations:
   1. Unless dimensioned, box locations indicated are approximate.
   2. Locate junction and pull boxes as indicated, as required to facilitate installation of conductors, and to limit conduit length and/or number of bends between pulling points in accordance with Section 26 05 33.13.

E. Box Supports:
   1. Secure and support boxes in accordance with NFPA 70 and Section 26 05 29 using suitable supports and methods approved by the authority having jurisdiction.
   2. Provide independent support from building structure except for cast metal boxes (other than boxes used for fixture support) supported by threaded conduit connections in accordance with NFPA 70. Do not provide support from piping, ductwork, or other systems.

F. Install boxes plumb and level.

G. Install boxes as required to preserve insulation integrity.

H. Install permanent barrier between ganged wiring devices when voltage between adjacent devices exceeds 300 V.

I. Close unused box openings.

J. Install blank wall plates on junction boxes and on outlet boxes with no devices or equipment installed or designated for future use.

3.03 CLEANING

A. Clean interior of boxes to remove dirt, debris, plaster and other foreign material.

3.04 PROTECTION

A. Immediately after installation, protect boxes from entry of moisture and foreign material until ready for installation of conductors.

END OF SECTION 26 05 33.16

This page intentionally left blank

SECTION 26 24 16
PANELBOARDS

PART 1 GENERAL

1.01 SECTION INCLUDES

A. Power distribution panelboards.

B. Lighting and appliance panelboards.

C. Overcurrent protective devices for panelboards.

1.02 RELATED REQUIREMENTS

A. Section 26 05 29 - Hangers and Supports for Electrical Systems.

1.03 REFERENCE STANDARDS

A. FS W-C-375 - Circuit Breakers, Molded Case; Branch Circuit and Service.

B. NECA 1 - Standard for Good Workmanship in Electrical Construction.

C. NECA 407 - Standard for Installing and Maintaining Panelboards.

D. NEMA EN 10250 - Enclosures for Electrical Equipment (1000 Volts Maximum).

E. NEMA PB 1 - Panelboards.

F. NEMA PB 1.1 - General Instructions for Proper Installation, Operation and Maintenance of Panelboards Rated 1000V or Less.

G. NETA ATS - Standard for Acceptance Testing Specifications for Electrical Power Equipment And Systems.

H. NFPA 70 - National Electrical Code.

I. UL 50 - Enclosures for Electrical Equipment, Non-Environmental Considerations.

J. UL 50E - Enclosures for Electrical Equipment, Environmental Considerations.

K. UL 67 - Panelboards.

L. UL 489 - Molded-Case Circuit Breakers, Molded-Case Switches and Circuit Breaker Enclosures.

M. UL 869A - Reference Standard for Service Equipment.

N. UL 1053 - Ground-Fault Sensing and Relaying Equipment.

1.04 ADMINISTRATIVE REQUIREMENTS

A. Coordination:

1. Coordinate the work with other trades to avoid placement of ductwork, piping, equipment, or other potential obstructions within the dedicated equipment spaces and working clearances for electrical equipment required by NFPA 70.
2. Coordinate arrangement of electrical equipment with the dimensions and clearance requirements of the actual equipment to be installed.
3. Verify with manufacturer that conductor terminations are suitable for use with the conductors to be installed.
4. Notify Engineer of any conflicts with or deviations from Contract Documents. Obtain direction before proceeding with work.

1.05 SUBMITTALS

A. Product Data: Provide manufacturer's standard catalog pages and data sheets for panelboards, enclosures, overcurrent protective devices, and other installed components and accessories.

B. Manufacturer's equipment seismic qualification certification.

C. Source Quality Control Test Reports: Include reports for tests designated in NEMA PB 1 as routine tests.

D. Field Quality Control Test Reports.

E. Manufacturer's Installation Instructions: Indicate application conditions and limitations of use stipulated by product testing agency. Include instructions for storage, handling, protection, examination, preparation, and installation of product.

F. Project Record Documents: Record actual installed locations of panelboards and actual installed circuiting arrangements.

G. Maintenance Data: Include information on replacement parts and recommended maintenance procedures and intervals.

H. Maintenance Materials: Furnish the following for Owner's use in maintenance of project.
   1. Panelboard Keys: Two of each different key.

1.06 QUALITY ASSURANCE

A. Comply with requirements of NFPA 70.

B. Maintain at the project site a copy of each referenced document that prescribes execution requirements.

C. Manufacturer Qualifications: Company specializing in manufacturing the products specified in this section with minimum three years documented experience.

D. Product Listing Organization Qualifications: An organization recognized by OSHA as a Nationally Recognized Testing Laboratory (NRTL) and acceptable to authorities having jurisdiction.

1.07 DELIVERY, STORAGE, AND HANDLING

A. Receive, inspect, handle, and store panelboards in accordance with manufacturer's instructions and NECA 407.

B. Store in a clean, dry space. Maintain factory wrapping or provide an additional heavy canvas or heavy plastic cover to protect units from dirt, water, construction debris, and traffic.

C. Handle carefully in accordance with manufacturer's written instructions to avoid damage to panelboard internal components, enclosure, and finish.

1.08 FIELD CONDITIONS

A. Maintain ambient temperature within the following limits during and after installation of panelboards:
   1. Panelboards Containing Circuit Breakers: Between 23 degrees F and 104 degrees F.

PART 2 PRODUCTS

2.01 PANELBOARDS - GENERAL REQUIREMENTS

A. Provide products listed, classified, and labeled as suitable for the purpose intended.

B. Unless otherwise indicated, provide products suitable for continuous operation under the following service conditions:
   1. Altitude: Less than 6,600 feet.
   2. Ambient Temperature:
      a. Panelboards Containing Circuit Breakers: Between 23 degrees F and 104 degrees F.

C. Short Circuit Current Rating:
   1. Label equipment utilizing series ratings as required by NFPA 70.

D. Panelboards Used for Service Entrance: Listed and labeled as suitable for use as service equipment according to UL 869A.

E. Mains: Configure for top or bottom incoming feed as indicated or as required for the installation.

F. Branch Overcurrent Protective Devices: Replaceable without disturbing adjacent devices.

G. Bussing: Sized in accordance with UL 67 temperature rise requirements.
   1. Provide fully rated neutral bus, with a suitable lug for each feeder or branch circuit requiring a neutral connection.
   2. Provide solidly bonded equipment ground bus in each panelboard, with a suitable lug for each feeder and branch circuit equipment grounding conductor.

H. Conductor Terminations: Suitable for use with the conductors to be installed.

I. Enclosures: Comply with NEMA EN 10250, and list and label as complying with UL 50 and UL 50E.
   1. Environment Type per NEMA EN 10250: Unless otherwise indicated, as specified for the following installation locations:
      a. Indoor Clean, Dry Locations: Type 1.
      b. Outdoor Locations: Type 3R.
   2. Boxes: Galvanized steel unless otherwise indicated.
      a. Provide wiring gutters sized to accommodate the conductors to be installed.
   3. Fronts:
      a. Fronts for Surface-Mounted Enclosures: Same dimensions as boxes.
      b. Fronts for Flush-Mounted Enclosures: Overlap boxes on all sides to conceal rough opening.
   4. Lockable Doors: All locks keyed alike unless otherwise indicated.

J. Future Provisions: Prepare all unused spaces for future installation of devices including bussing, connectors, mounting hardware and all other required provisions.

K. Ground Fault Protection: Where ground-fault protection is indicated, provide system listed and labeled as complying with UL 1053.

L. Load centers are not acceptable.

M. Provide the following features and accessories where indicated or where required to complete installation:
   1. Feed-through lugs.
   2. Sub-feed lugs.

2.02 POWER DISTRIBUTION PANELBOARDS

A. Description: Panelboards complying with NEMA PB 1, power and feeder distribution type, circuit breaker type, and listed and labeled as complying with UL 67; ratings, configurations and features as indicated on the drawings.

B. Conductor Terminations:
   1. Main and Neutral Lug Material: Copper, suitable for terminating copper conductors only.
   2. Main and Neutral Lug Type: Mechanical.

C. Bussing:
   1. Phase and Neutral Bus Material: Copper.
   2. Ground Bus Material: Copper.

D. Circuit Breakers:
   1. Provide bolt-on type.
   2. Provide thermal magnetic circuit breakers unless otherwise indicated.

E. Enclosures:
   1. Provide surface-mounted enclosures unless otherwise indicated.
   2. Fronts: Provide door-in-door trim with hinged cover for access to load terminals and wiring gutters, and separate lockable hinged door with concealed hinges for access to overcurrent protective device handles without exposing live parts.
   3. Provide clear plastic circuit directory holder mounted on inside of door.

2.03 LIGHTING AND APPLIANCE PANELBOARDS

A. Description: Panelboards complying with NEMA PB 1, lighting and appliance branch circuit type, circuit breaker type, and listed and labeled as complying with UL 67; ratings, configurations and features as indicated on the drawings.

B. Conductor Terminations:
   1. Main and Neutral Lug Material: Copper, suitable for terminating copper conductors only.
   2. Main and Neutral Lug Type: Mechanical.

C. Bussing:
   1. Phase Bus Connections: Arranged for sequential phasing of overcurrent protective devices.
   2. Phase and Neutral Bus Material: Copper.
   3. Ground Bus Material: Copper.

D. Circuit Breakers: Thermal magnetic bolt-on type.

E. Enclosures:
   1. Provide surface-mounted or flush-mounted enclosures as indicated.
   2. Fronts: Provide door-in-door trim with hinged cover for access to load terminals and wiring gutters, and separate lockable hinged door with concealed hinges for access to overcurrent protective device handles without exposing live parts.
   3. Provide clear plastic circuit directory holder mounted on inside of door.

2.04 OVERCURRENT PROTECTIVE DEVICES

A. Molded Case Circuit Breakers:
   1. Description: Quick-make, quick-break, over center toggle, trip-free, trip-indicating circuit breakers listed and labeled as complying with UL 489, and complying with FS W-C-375 where applicable; ratings, configurations, and features as indicated on the drawings.
   2. Interrupting Capacity:
      a. Provide circuit breakers with interrupting capacity as required to provide the short circuit current rating indicated, but not less than:
         1) 10,000 rms symmetrical amperes at 240 VAC or 208 VAC.
         2) 14,000 rms symmetrical amperes at 480 VAC.
      b. Fully Rated Systems: Provide circuit breakers with interrupting capacity not less than the short circuit current rating indicated.
   3. Conductor Terminations:
      a. Provide mechanical lugs unless otherwise indicated.
      b. Lug Material: Aluminum, suitable for terminating aluminum or copper conductors.
   4. Thermal Magnetic Circuit Breakers: For each pole, furnish thermal inverse time tripping element for overload protection and magnetic instantaneous tripping element for short circuit protection.
      a. Provide field-adjustable magnetic instantaneous trip setting for circuit breaker frame sizes 225 amperes and larger.
   5. Multi-Pole Circuit Breakers: Furnish with common trip for all poles.

2.05 SOURCE QUALITY CONTROL

A. Factory test panelboards according to NEMA PB 1.

PART 3 EXECUTION

3.01 EXAMINATION

A. Verify that field measurements are as indicated.

B. Verify that the ratings and configurations of the panelboards and associated components are consistent with the indicated requirements.

C. Verify that mounting surfaces are ready to receive panelboards.

D. Verify that conditions are satisfactory for installation prior to starting work.

3.02 INSTALLATION

A. Perform work in accordance with NECA 1 (general workmanship).

B. Install products in accordance with manufacturer's instructions.

C. Install panelboards in accordance with NECA 407 and NEMA PB 1.1.

D. Arrange equipment to provide minimum clearances in accordance with manufacturer's instructions and NFPA 70.

E. Provide required support and attachment in accordance with Section 26 05 29.

F. Install panelboards plumb.

G. Install flush-mounted panelboards so that trims fit completely flush to wall with no gaps and rough opening completely covered.

H. Mount panelboards such that the highest position of any operating handle for circuit breakers or switches does not exceed 79 inches above the floor or working platform.

I. Install all field-installed branch devices, components, and accessories.

J. Set field-adjustable ground fault protection pickup and time delay settings as indicated.

K. Provide filler plates to cover unused spaces in panelboards.

3.03 FIELD QUALITY CONTROL

A. Inspect and test in accordance with NETA ATS, except Section 4.

B. Molded Case Circuit Breakers: Perform inspections and tests listed in NETA ATS, Section 7.6.1.1 for all main circuit breakers. Tests listed as optional are not required.

C. Ground Fault Protection Systems: Test in accordance with manufacturer's instructions as required by NFPA 70.

D. Correct deficiencies and replace damaged or defective panelboards or associated components.

3.04 ADJUSTING

A. Adjust tightness of mechanical and electrical connections to manufacturer's recommended torque settings.

B. Adjust alignment of panelboard fronts.

C. Load Balancing: For each panelboard, rearrange circuits such that the difference between each measured steady state phase load does not exceed 20 percent and adjust circuit directories accordingly. Maintain proper phasing for multi-wire branch circuits.

3.05 CLEANING

A. Clean dirt and debris from panelboard enclosures and components according to manufacturer's instructions.

B. Repair scratched or marred exterior surfaces to match original factory finish.

END OF SECTION 26 24 16

This page intentionally left blank

SECTION 26 28 16.16
ENCLOSED SWITCHES

PART 1 GENERAL

1.01 SECTION INCLUDES

A. Enclosed safety switches.

1.02 RELATED REQUIREMENTS

A. Section 26 05 29 - Hangers and Supports for Electrical Systems.

1.03 REFERENCE STANDARDS

A. NECA 1 - Standard for Good Workmanship in Electrical Construction.

B. NEMA BS 31047 - Heavy Duty Enclosed and Dead-Front Switches (600 Volts Maximum).

C. NEMA EN 10250 - Enclosures for Electrical Equipment (1000 Volts Maximum).

D. NETA ATS - Standard for Acceptance Testing Specifications for Electrical Power Equipment And Systems.

E. NFPA 70 - National Electrical Code.

F. UL 50 - Enclosures for Electrical Equipment, Non-Environmental Considerations.

G. UL 50E - Enclosures for Electrical Equipment, Environmental Considerations.

H. UL 98 - Enclosed and Dead-Front Switches.

1.04 ADMINISTRATIVE REQUIREMENTS

A. Coordination:

1. Coordinate the work with other trades. Avoid placement of ductwork, piping, equipment, or other potential obstructions within the dedicated equipment spaces and within working clearances for electrical equipment required by NFPA 70.
2. Coordinate arrangement of electrical equipment with the dimensions and clearance requirements of the actual equipment to be installed.
3. Verify with manufacturer that conductor terminations are suitable for use with the conductors to be installed.
4. Notify Engineer of any conflicts with or deviations from Contract Documents. Obtain direction before proceeding with work.

1.05 SUBMITTALS

A. Product Data: Provide manufacturer's standard catalog pages and data sheets for enclosed switches and other installed components and accessories.

B. Shop Drawings: Indicate outline and support point dimensions, voltage and current ratings, short circuit current ratings, conduit entry locations, conductor terminal information, and installed features and accessories.

C. Field Quality Control Test Reports.

D. Manufacturer's Installation Instructions: Indicate application conditions and limitations of use stipulated by product testing agency. Include instructions for storage, handling, protection, examination, preparation, installation, and starting of product.

E. Project Record Documents: Record actual locations of enclosed switches.

F. Maintenance Data: Include information on replacement parts and recommended maintenance procedures and intervals.

1.06 QUALITY ASSURANCE

A. Comply with requirements of NFPA 70.

B. Maintain at the project site a copy of each referenced document that prescribes execution requirements.

C. Manufacturer Qualifications: Company specializing in manufacturing the products specified in this section with minimum three years documented experience.

1.07 DELIVERY, STORAGE, AND HANDLING

A. Store in a clean, dry space. Maintain factory wrapping or provide an additional heavy canvas or heavy plastic cover to protect units from dirt, water, construction debris, and traffic.

B. Handle carefully in accordance with manufacturer's written instructions to avoid damage to enclosed switch internal components, enclosure, and finish.

1.08 FIELD CONDITIONS

A. Maintain ambient temperature between -22 degrees F and 104 degrees F during and after installation of enclosed switches.

PART 2 PRODUCTS

2.01 ENCLOSED SAFETY SWITCHES

A. Description: Quick-make, quick-break enclosed safety switches listed and labeled as complying with UL 98; heavy duty; ratings, configurations, and features as indicated on the drawings.

B. Provide products listed, classified, and labeled as suitable for the purpose intended.

C. Unless otherwise indicated, provide products suitable for continuous operation under the following service conditions:
   1. Altitude: Less than 6,600 feet.
   2. Ambient Temperature: Between -22 degrees F and 104 degrees F.

D. Horsepower Rating: Suitable for connected load.

E. Voltage Rating: Suitable for circuit voltage.

F. Provide with switch blade contact position that is visible when the cover is open.

G. Conductor Terminations: Suitable for use with the conductors to be installed.

H. Provide solidly bonded equipment ground bus in each enclosed safety switch, with a suitable lug for terminating each equipment grounding conductor.

I. Enclosures: Comply with NEMA EN 10250, and list and label as complying with UL 50 and UL 50E.
   1. Environment Type per NEMA EN 10250: Unless otherwise indicated, as specified for the following installation locations:
      a. Indoor Clean, Dry Locations: Type 1.
      b. Outdoor Locations: Type 3R.

J. Provide safety interlock to prevent opening the cover with the switch in the ON position with capability of overriding interlock for testing purposes.

K. Heavy Duty Switches:
   1. Comply with NEMA BS 31047.
   2. Conductor Terminations:
      a. Provide mechanical lugs unless otherwise indicated.
      b. Lug Material: Aluminum, suitable for terminating aluminum or copper conductors.
   3. Provide externally operable handle with means for locking in the OFF position, capable of accepting three padlocks.

PART 3 EXECUTION

3.01 EXAMINATION

A. Verify that field measurements are as indicated.

B. Verify that the ratings of the enclosed switches are consistent with the indicated requirements.

C. Verify that mounting surfaces are ready to receive enclosed safety switches.

D. Verify that conditions are satisfactory for installation prior to starting work.

3.02 INSTALLATION

A. Install products in accordance with manufacturer's instructions.

B. Perform work in accordance with NECA 1 (general workmanship).

C. Arrange equipment to provide minimum clearances in accordance with manufacturer's instructions and NFPA 70.

D. Provide required support and attachment in accordance with Section 26 05 29.

E. Install enclosed switches plumb.

F. Except where indicated to be mounted adjacent to the equipment they supply, mount enclosed switches such that the highest position of the operating handle does not exceed 79 inches above the floor or working platform.

3.03 FIELD QUALITY CONTROL

A. Inspect and test in accordance with NETA ATS, except Section 4.

B. Perform inspections and tests listed in NETA ATS, Section 7.5.1.1.

C. Correct deficiencies and replace damaged or defective enclosed safety switches or associated components.

3.04 ADJUSTING

A. Adjust tightness of mechanical and electrical connections to manufacturer's recommended torque settings.

3.05 CLEANING

A. Clean dirt and debris from switch enclosures and components according to manufacturer's instructions.

B. Repair scratched or marred exterior surfaces to match original factory finish.

END OF SECTION 26 28 16.16

KATHLEEN E. GOODWING ELEMENTARY SCHOOL

HVAC UPGRADES

80 BOSTON POST ROAD, OLD SAYBROOK, CT 06475

4/3/2026

SHEET LIST	
SHEET NUMBER	**SHEET NAME**
G0.01	COVER SHEET
M0.01	MECHANICAL GENERAL NOTES AND LEGENDS
MD1.11	MECHANICAL ROOM 144 DEMOLITION PLAN
MD4.11	MECHANICAL ROOM 144 ENLARGED DEMOLITION PLANS
M1.11	MECHANICAL NEW DUCTWORK PLAN
M1.31	MECHANICAL ROOM 144 ROOF NEW WORK PLAN
M4.11	MECHANCIAL ROOM 144 ENLARGED PLANS
M5.01	MECHANICAL DETAILS
M5.02	MECHANICAL DETAILS
M5.03	MECHANICAL SEQUENCE OF OPERATIONS
M5.04	MECHANICAL SEQUENCE OF OPERATIONS
M6.01	MECHANICAL SCHEDULES
E-001	ELECTRICAL LEGENDS AND NOTES
E-111	MECH RM 144 ELECTRICAL NEW WORK PLAN
E-112	MECH RM 144 ELECTRICAL DEMOLITION AND NEW WORK PLAN
E-501	ELECTRICAL DETAILS AND SCHEDULES



LOCATION MAP

PREPARED BY

FUSS & O'NEILL

One Financial Plaza, 15th Floor
Hartford, Connecticut 06103
860.646.2469
www.fando.com

PREPARED FOR

OLD SAYBROOK PUBLIC SCHOOLS

60 SHEFFIELD STREET, OLD
SAYBROOK, CT 06475

PROJ. No.:	20210255.A44
DATE:	04/03/2026

G-001

C:\Users\jboudreau\OneDrive - DRMP, Inc\Documents\20210255.A44 - OSES HVAC DESIGN_M - R25_jboudreau062.rvt

MECHANICAL GENERAL NOTES

1. ALL CONTRACTORS SHALL OBTAIN AND REVIEW ALL CONTRACT DOCUMENTS INCLUDING PLANS AND SPECIFICATIONS OF ALL TRADES BEFORE SUBMITTING BID. REFER TO SPECIFICATION AND PLANS, INCLUDING ALL EQUIPMENT SCHEDULES FOR MECHANICAL/PLUMBING AND ELECTRICAL ENGINEERING.
2. THE INFORMATION SHOWN ON THE DRAWINGS IS DIAGRAMMATIC, INDICATING THE GENERAL ARRANGEMENT OF SYSTEMS AND WORK INCLUDED IN THIS CONTRACT. THE CONTRACTOR SHALL COORDINATE LOCATIONS OF EQUIPMENT, AND THEIR ASSOCIATED ACCESS AREAS, WITH ALL TRADES BEFORE STARTING CONSTRUCTION. ANY MODIFICATIONS TO THE EQUIPMENT LAYOUT REQUIRED BY INSTALLATION BY ANY CONTRACTOR SHALL BE PERFORMED AT NO ADDITIONAL COST TO THE OWNER.
3. CONTRACTOR SHALL NOTIFY ENGINEER OF ANY DISCREPANCY BETWEEN PLANS AND SPECIFICATIONS, OR BETWEEN CONSTRUCTION DOCUMENTS AND FIELD CONDITIONS. FOR EACH CONFLICT, CONTRACTOR SHALL CARRY THE MORE EXPENSIVE OR LARGER QUANTITY OPTION.
4. CONTRACTOR SHALL VERIFY ALL DIMENSIONS AND EQUIPMENT LOCATIONS IN THE FIELD, AND SHALL ADVISE THE ENGINEER AND THE OWNER OF ANY DISCREPANCIES BEFORE PERFORMING THE WORK.
5. CONTRACTOR SHALL SECURE ALL PERMITS AND APPLICATIONS AND PAY ALL FEES PERTAINING TO THE CONTRACT.
6. ALL EQUIPMENT SHALL BE LOCATED IN ACCESSIBLE LOCATIONS WITH CODE OR MANUFACTURER-REQUIRED ACCESS SPACES. ALL MECHANICAL EQUIPMENT INSTALLATIONS SHALL ADHERE TO MANUFACTURER OPERATION CLEARANCE AND SERVICE CLEARANCE REQUIREMENTS.
7. ALL EQUIPMENT SHALL BE INSTALLED IN STRICT COMPLIANCE WITH THE MANUFACTURER'S WRITTEN INSTRUCTIONS. THE CONTRACTOR SHALL PROVIDE ALL HANGERS AND SUPPORTS REQUIRED FOR A COMPLETE INSTALLATION.
8. EACH CONTRACTOR SHALL COORDINATE THE LOCATION OF THEIR WORK WITH ALL OTHER TRADES BEFORE STARTING CONSTRUCTION. ANY MODIFICATIONS TO THE SYSTEM LAYOUT REQUIRED FOR INSTALLATION SHALL BE PERFORMED AT NO ADDITIONAL COST TO THE OWNER.
9. CONTRACTOR SHALL BE RESPONSIBLE FOR PERSONNEL IDENTIFICATION AND SITE SAFETY MEASURES AS REQUIRED BY PROJECT SITE SUPER AND GC.
10. CONTRACTOR SHALL SCHEDULE ALL SHUTDOWNS THAT AFFECT UTILITIES AND BUILDING OPERATION WITH THE OWNER A MINIMUM OF 72 HOURS PRIOR TO THE SCHEDULED SERVICE INTERRUPTION.
11. CONTRACTOR SHALL BE RESPONSIBLE FOR ALL RIGGING, HANDLING AND PROTECTION OF MATERIALS.
12. CONTRACTORS SHALL PROVIDE SLEEVES AND SEALS FOR ALL PIPING OR CONDUIT THAT PENETRATES CONCRETE WALLS OR FLOOR SLABS.
13. GC SHALL RESPONSIBLE FOR ALL AIR SEALING, WEATHER-SEALING AND FIRE-STOPPING MEDIA AS REQUIRED. WEATHER-TIGHT SEALS AT MECHANICAL PENETRATIONS THROUGH WALLS AND ROOFS TO BE COMPLETED BY THE GC. MC TO SUPPLY ACCESS PANELS WHERE REQUIRED FOR INSTALLATION BY THE GC.
14. CONTRACTOR SHALL SUBMIT SIZE AND LOCATION OF ANY PROPOSED STRUCTURAL MEMBER PENETRATIONS TO THE STRUCTURAL ENGINEER FOR REVIEW AND DETAILING BEFORE INSTALLATION. CONTRACTOR SHALL REPAIR ANY DAMAGE DUE TO PENETRATIONS INSTALLED, AT NO COST TO OWNER. THE DAMAGE REPAIRING SHALL ALSO BE REVIEWED AND APPROVED BY THE STRUCTURAL ENGINEER.
15. CONTRACTOR SHALL SUBMIT COMPLETE ELECTRONIC SET OF SHOP DRAWINGS, SUBMITTALS, AND EQUIPMENT CUT SHEET INFORMATION TO THE ENGINEER FOR REVIEW AND APPROVAL PRIOR TO STARTING ANY WORK.
16. EQUIPMENT, PIPE AND SYSTEMS LAYOUTS ARE DIAGRAMMATIC. SYSTEMS MAY BE SHOWN DISPLACED FOR CLARITY. CONTRACTOR SHALL PROVIDE ALL SYSTEM APPURTENANCES FOR FULLY FUNCTIONAL SYSTEM PER MANUFACTURER AND DIV 23 SPECIFICATIONS. MC SHALL SUPPLY AND INSTALL ALL FITTINGS, COUPLINGS, VALVES, UNIONS, PIPE OFFSETS AND TRANSITIONS AS REQUIRED. COORDINATE WITH OTHER TRADES AT NO COST TO THE OWNER.
17. ALL REQUIRED ENVELOPE PENETRATIONS THROUGH WALLS, FLOORS, AND CEILINGS SHALL BE COORDINATED WITH GC IN FIELD PRIOR TO CORING.
18. NO PIPING OR DUCTS SHALL BE INSTALLED OVER ELECTRICAL PANELS, TRANSFORMERS, OR ELEVATOR MACHINE ROOM EQUIPMENT. CONTRACTOR SHALL COORDINATE PIPING AND DUCTWORK WITH ELECTRICAL EQUIPMENT IN FIELD PRIOR TO SYSTEM INSTALLATIONS.
19. PROVIDE SPRING ISOLATED & SEISMICALLY RATED HANGERS FOR EQUIPMENT, DUCTWORK AND PIPING PER SPECIFICATIONS. CONTRACTOR IS TO PROVIDE SUBMITTALS INDICATING PROPOSED SYSTEMS, INSTALLATION DETAILS AND PLAN LOCATIONS WITHIN COORDINATION DRAWING SUBMITTAL.
20. PROVIDE AIR VENTS AT ALL HIGH POINTS AND DRAINS AT LOW POINTS.
21. PROVIDE STUD GUARDS FOR ALL PIPING LOCATED WITHIN 1" OF EDGE OF FRAMING MEMBERS
22. SYSTEM INSTALLATIONS: EQUIPMENT AND ASSOCIATED SYSTEM APPURTENANCES SHALL BE INSTALLED IN A NEAT AND WORKMANLIKE MANNER IN ACCORDANCE WITH INDUSTRY BEST PRACTICE. SYSTEMS SHALL BE INSTALLED TO FACILITATE FUTURE SERVICE AND REPLACEMENT WITH RESPECT TO DISCONNECTION/RECONNECTION OF PIPES, EQUIPMENT AND ACCESSORIES AS REQUIRED. MECHANICAL SYSTEMS SHALL BE INSTALLED SUCH THAT ALL PARTS ARE EASILY ACCESSIBLE FOR INSPECTION, OPERATION, MAINTENANCE AND REPAIR.
23. ALL EQUIPMENT SHALL BE INSTALLED IN ACCORDANCE WITH THE MANUFACTURERS' INSTRUCTIONS & REQUIREMENTS AND THE BEST STANDARD PRACTICE FOR THIS TYPE OF WORK.
24. BEST PRACTICE: IT IS NOT INTENDED THAT THE DRAWINGS SHALL SHOW EVERY FITTING, CONNECTION, OR APPLIANCE THIS CONTRACTOR SHALL FURNISH ALL MATERIAL AND LABOR NECESSARY TO PROVIDE COMPLETE AND OPERATIONAL SYSTEMS IN ACCORDANCE WITH THE BEST PRACTICE OF THE TRADE.
25. CONTRACTOR SHALL VERIFY THE LOCATIONS AND MOUNTING HEIGHTS OF ALL EQUIPMENT AND MATERIALS, AND THE EXACT ROUTING OF ALL PIPES AND DUCTWORK WITH THE OWNER'S REPRESENTATIVE IN THE FIELD, PRIOR TO COMMENCING ANY WORK ANY CONFLICTS WITH LOCATIONS, OR PROBLEMS ENCOUNTERED WITH ROUTING, SHALL BE PROMPTLY BROUGHT TO THE ATTENTION OF THE ENGINEER FOR RESOLUTION 8 MATERIALS: ALL MATERIALS, FIXTURES AND EQUIPMENT SHALL BE NEW WITHOUT IMPERFECTIONS AND SHALL BE DELIVERED, ERECTED, CONNECTED AND FINISHED IN EVERY DETAIL WHEREVER POSSIBLE, ALL TRIM, ACCESSORIES AND PARTS SHALL BE OF THE SAME MANUFACTURER AS THE RELATED EQUIPMENT AND FIXTURES.
26. ALL DUCTWORK SHALL BE INSTALLED IN ACCORDANCE WITH SMACNA STANDARDS. CONTRACTOR SHALL BE RESPONSIBLE FOR AIR SEALING AND INSULATION PER SPECIFICATION REQUIREMENTS.
27. ALL ELECTRICAL SHALL BE INSTALLED IN ACCORDANCE WITH THE NATIONAL ELECTRIC CODE AND ALL LOCAL REQUIREMENTS COORDINATE ELECTRICAL CHARACTERISTICS FOR ALL EQUIPMENT WITH EC BEFORE ORDERING EQUIPMENT.
28. ALL THERMOSTATS SHALL BE WALL MOUNTED MIN. 48" AFF UNLESS NOTED OTHERWISE.
29. CONTRACTOR SHALL PROVIDE COMPLETE CONTROL SYSTEM FOR FULLY FUNCTIONAL SYSTEM PER MANUFACTURER'S AND SEQUENCE OF OPERATION REQUIREMENTS. THE MC SHALL BE RESPONSIBLE FOR ALL SENSORS, THERMOSTATS,CONTACTS, CONTROL PANELS, BACK-BOARD MODULES LOW-VOLTAGE WIRING, TRANSFORMERS, AND ASSOCIATED SYSTEM PROGRAMMING AS REQUIRED.
30. CONTRACTOR SHALL BE RESPONSIBLE FOR COORDINATING AND ASSISTING WITH THIRD PARTY COMMISSIONING AS REQUIRED BY ARCHITECTURAL PROJECT SPECIFICATIONS FOR COMMISSIONING, TO COMPLETE FUNCTIONAL TESTING AND PROGRAMMING REQUIREMENTS PER OWNER'S REQUIREMENTS.
31. ACOUSTIC AND VIBRATION REQUIREMENTS: MECHANICAL AND ELECTRICAL EQUIPMENT SHALL OPERATE WITHOUT OBJECTIONABLE NOISE AND/OR VIBRATION, AS DETERMINED BY THE ENGINEER. ALL EQUIPMENT WITH BLOWER MOTORS, ROTATING WHEELS OR INTEGRAL MECHANISMS THAT CAN GENERATE NOISE OR VIBRATION ARE TO BE PROVIDED WITH VIBRATION ISOLATION RATED FOR THEIR ANTICIPATED SERVICE. CONTRACTOR SHALL PROVIDE ALL NECESSARY HARDWARE FOR NOISE AND VIBRATION ISOLATION.
32. HYDROSTATIC TESTING SHALL BE PERFORMED ON ALL EQUIPMENT AND PIPING THAT IS SUBJECTED TO PRESSURES ABOVE AMBIENT. THE MECHANICAL/PLUMBING CONTRACTOR SHALL DEVELOP A TEST SEQUENCE AND PHASES BASED UPON THE SYSTEM DESIGN, THE SYSTEM COMPONENTS THAT REQUIRE TESTING, AND THE CONSTRUCTION SEQUENCE OF THOSE COMPONENTS. THE CONTRACTOR SHALL PROVIDE THIS TEST SEQUENCE TO THE OWNER AND ENGINEER FOR REVIEW. THE CONTRACTOR SHALL GIVE THE ENGINEER AND OWNER 48 HOURS NOTICE BEFORE PERFORMING ANY SYSTEM COMPONENT PRESSURE TEST. THE CONTRACTOR SHALL NOT USE A COMPRESSIBLE FLUID, SUCH AS COMPRESSED AIR, FOR THE HYDROSTATIC TESTS. THE CONTRACTOR SHALL PROVIDE DOCUMENTATION TO THE ENGINEER AND OWNER THAT THE PRESSURE TEST EQUIPMENT, INCLUDING PRESSURE SENSORS AND GAGES, HAS BEEN CALIBRATED BEFORE USE. THE CONTRACTOR SHALL ISOLATE ALL EQUIPMENT AND PIPING THAT IS NOT UNDERGOING TESTING USING FLANGES OR CAPS, NOT SHUTOFF VALVES. REFER TO SPECIFICATIONS FOR HYDROSTATIC PRESSURE TEST DETAILS FOR A GIVEN SYSTEM COMPONENT.
33. PROTECTION OF EQUIPMENT AND MATERIALS: RESPONSIBILITY FOR CARE AND PROTECTION OF ALL MATERIALS AND WORK RESTS WITH THIS CONTRACTOR AT ALL TIMES UNTIL IT HAS BEEN APPROVED.
34. CONTRACTOR GUARANTEE: ALL NEW COMPONENTS OF THE INSTALLATION SHALL BE GUARANTEED IN WRITING BY THIS CONTRACTOR TO BE FREE FROM DEFECTS OF MANUFACTURE AND INSTALLATION FOR A PERIOD OF ONE YEAR FROM THE DATE OF WRITTEN ACCEPTANCE OF THE ENTIRE BUILDING BY THE ENGINEER . ANY DEFECTS FOUND SHALL BE REPAIRED BY THE MECHANICAL CONTRACTOR AT THEIR OWN EXPENSE AND AT NO COST TO THE OWNER.
35. CONTRACTOR NOTIFICATION REQUIREMENTS: THE MC SHALL NOTIFY THE ENGINEER UPON: (1) COMPLETION OF ALL ROUGH PIPING, BEFORE CLOSURE OF ANY TRENCHES, OPEN WALL CAVITIES OR CHASES (2) UPON "SUBSTANTIAL COMPLETION" OF ALL SYSTEMS INCLUDING OPERATIONAL SYSTEMS AND FINISH WORK AFTER "SUBSTANTIAL COMPLETION", THE ARCHITECT WILL PREPARE A PUNCH LIST OF ITEMS TO BE CORRECTED THE MC SHALL CORRECT ANY DEFICIENCIES FOUND PROMPTLY, AT THEIR OWN EXPENSE.
36. FINAL COMPLETION: THE WORK SHALL NOT BE CONSIDERED COMPLETE UNTIL THE PUNCH LIST IS COMPLETED TO THE SATISFACTION OF THE ENGINEER AND ALL FINAL INSPECTIONS HAVE BEEN COMPLETED. UPON COMPLETION OF PROJECT CONSTRUCTION AND FINAL PUNCH LIST OUTSTANDING ITEMS, CONTRACTOR SHALL SUPPLY THE ENGINEER WITH (1) COMPLETE SET OF ELECTRONIC AS-BUILT DOCUMENTS AND (1) COMPLETE ELECTRONIC SET OF OPERATIONS AND MAINTENANCE MANUALS. CONTRACTOR SHALL BE RESPONSIBLE FOR CLOSING ALL PROJECT PERMITS AND FINAL INSPECTIONS AS REQUIRED BY LOCAL AHJ.

MECHANICAL ABBREVIATIONS

A	AMP	H.P.	HORSEPOWER
AFF	ABOVE FINISHED FLOOR	HTG	HEATING
AFUE	ANNUAL FUEL UTILIZATION EFFICIENCY	HWS	HOT WATER SUPPLY
AHJ	AUTHORITY HAVING JURISDICTION	HWR	HOT WATER RETURN
AHU	AIR HANDLING UNIT	HX	HEAT EXCHANGER
AS	AIR SEPARATOR	HZ	HERTZ
AWT	AVERAGE WATER TEMPERATURE	IN	INCH
BS / BC	BRANCH SELECTOR / BRANCH CONTROLLER BOX	LAT	LEAVING AIR TEMPERATURE
BFP	BACKFLOW PREVENTER	LBS	POUNDS
BMS	BUILDING MANAGEMENT SYSTEM	LWT	LEAVING WATER TEMPERATURE
BTUH	BRITISH THERMAL UNITS PER HOUR	MAU	MAKEUP AIR UNIT
CA	COMBUSTION AIR	MBH	THOUSANDS OF BRITISH THERMAL UNITS PER HOUR
CD	CONDENSATE DRAIN	MAX	MAXIMUM
CFM	CUBIC FEET PER MINUTE	MC	MECHANICAL CONTRACTOR
CH	CABINET HEATER	MCA	MAXIMUM CIRCUIT AMPS
CHWS	CHILLED WATER SUPPLY	MECH	MECHANICAL
CHWR	CHILLED WATER RETURN	MIN	MINIMUM
CLG	COOLING	MOCP	MAXIMUM OVER-CURRENT PROTECTION
CMU	CONCRETE MASONRY UNIT	NC	NORMALLY CLOSED
CO	CLEAN OUT	NEZV	NON-ELECTRIC ZONE VALVE
CW	COLD WATER	NIC	NOT IN CONTRACT
DDC	DIRECT DIGITAL CONTROL	NO	NORMALLY OPEN
DHW	DOMESTIC HOT WATER	NPW	NON-POTABLE WATER
DSD	DUCT SMOKE DETECTOR	NTS	NOT TO SCALE
DT	DELTA T	OA	OUTSIDE AIR
DU	DWELLING UNIT	OBD	OPPOSED BLADE DAMPER
DX	DIRECT EXPANSION	OD	OVERFLOW DRAIN
(E)	EXISTING	PROVIDE	SUPPLY AND INSTALL
EA	EXHAUST AIR	PC	PLUMBING CONTRACTOR
EBB	ELECTRIC BASEBOARD HEATER	POU	POINT OF USE
EC	ELECTRICAL CONTRACTOR	PRV	PRESSURE REDUCING VALVE
EER	ENERGY EFFICIENCY RATIO	RC	ROOFING CONTRACTOR
EF	EXHAUST FAN	RCP	REFLECTIVE CEILING PLAN
ERV	ENERGY RECOVERY VENTILATOR	RD	ROOF DRAIN
ETR	EXISTING TO REMAIN	RL	REFRIGERANT LIQUID LINE
ET	EXPANSION TANK	RS	REFRIGERANT SUCTION LINE
ESP	EXTERNAL STATIC PRESSURE	RTU	ROOF TOP UNIT
EUH	ELECTRIC UNIT HEATER	RV	RADON VENT THRU-ROOF
EWH	ELECTRIC WALL HEATER	RPZ	REDUCED PRESSURE ZONE
EWT	ENTERING WATER TEMPERATURE	SA	SUPPLY AIR
EXT	EXTERIOR	SEER	SEASONAL ENERGY EFFICIENCY RATIO
FCU	FAN COIL UNIT	SM	SHEET METAL
FD	FIRE DAMPER	SS	STAINLESS STEEL
FLA	FULL LOAD AMPS	T&P	TEMPERATURE & PRESSURE
FPI	FINS PER INCH	TS	TEMPERATURE SENSOR
FPC	FIRE PROTECTION CONTRACTOR	TYP	TYPICAL
FSB	FILED SUB-BID	TU	TERMINAL UNIT
FT	FEET	UH	UNIT HEATER
GAL	GALLLONS	UNO	UNLESS NOTED OTHERWISE
GC	GENERAL CONTRACTOR (PRIME CONTRACTOR & CON. MGR)	UV	UNIT VENTILATOR
GPM	GALLONS PER MINUTE	V	VENT
HG	HOT GAS HEAT RECOVERY REFRIGERANT LINE	VD	VOLUME DAMPER
HGR	HOT GAS REHEAT REFRIGERANT LINE	VFD	VARIABLE FREQUENCY DRIVE
HP	HEAT PUMP	W.M.S.	WIRE MESH SCREEN

PIPING & VALVE LEGEND

	PUMP / CIRCULATOR
	WELL TYPE TEMPERATURE SENSOR / THERMOMETER
	PRESSURE GAUGE
	VACUUM BREAKER
	PIPING WITH ELECTRIC HEAT TRACE
—HCS—	COMBINATION HOT & CHILLED WATER - SUPPLY
—HCR—	COMBINATION HOT & CHILLED WATER - RETURN
—HWS—	HOT WATER SUPPLY PIPING
—HWR—	HOT WATER RETURN PIPING
—CHWS—	CHILLED WATER SUPPLY PIPING
—CHWR—	CHILLED WATER RETURN PIPING
—CNDS—	CONDENSER WATER SUPPLY PIPING
—CNDR—	CONDENSER WATER RETURN PIPING
—CON—	HVAC CONDENSATE PIPING
CO X"CD	INLINE CONDENSATE CLEAN OUT
— CA —	COMBUSTION AIR INTAKE PIPING
— CV —	COMBUSTION AIR FLUE PIPING
— RL —	REFRIGERANT LIQUID PIPING
— RS —	REFRIGERANT SUCTION PIPING
— HG —	REFRIGERANT HOT GAS HEAT RECOVERY PIPING
—HGR—	REFRIGERANT HOT GAS REHEAT PIPING
	PIPE DROP DOWN
	PIPE DROP DOWN FROM TWO SIDES
	BALANCING VALVE
	BALL VALVE W/ DRAIN
	BALL VALVE
	PRESSURE REDUCING VALVE
	STEAM PRESSURE REGULATOR
	STEAM TRAP
	SPRING CHECK VALVE
RPZ	REDUCED PRESSURE ZONE (RPZ) / BACKFLOW PREVENTER
	STRAINER WITH BALL VALVE AND THREADED DRAIN CONNECTION, PROVIDE WITH DRAIN CAP AND CHAIN. 3/4" DRAIN SIZE MIN.
	THERMOSTATIC 3-WAY VALVE
	UNION
	FLANGE
	FLEXIBLE PIPE CONNECTION
	PIPE ANCHOR
	PIPE SLEEVE / GUIDE
	EXPANSION JOINT
	AIR VENT (AUTO-AIR VENT WITH REPLACABLE VALVE BODY)
	RELIEF VENT / VALVE
	TRIPLE DUTY VALVE
	PIPE PITCH DIRECTION

DUCTWORK & AIR SIDE LEGEND

	DUCT OFFSET DOWN IN PLAN
	DUCT OFFSET UP IN PLAN
	SUPPLY DIFFUSER (4-WAY)
	SUPPLY DIFFUSER (3-WAY)
	RETURN / EXHAUST DIFFUSER / GRILLE
	SG; SIDEWALL SUPPLY GRILLE
	RG / EG; SIDEWALL RETURN / EXHAUST GRILLE
	CEILING MOUNTED EXHAUST FAN
	ELECTRIC WALL HEATER
VD	VOLUME DAMPER
RD	RADIATION DAMPER
FD	FIRE DAMPER
CAR	CONSTANT AIRFLOW REGULATOR DAMPER
BD	BACK-DRAFT DAMPER
M	MOTORIZED (CONTROL) DAMPER
FSD	COMBINATION FIRE / SMOKE DAMPER
12"X12"	RECTANGULAR DUCTWORK (FIRST DIMENSION IS SIZE SHOWN)
(E)12"X12"	EXISTING DUCTWORK
12"Ø	ROUND DUCTWORK
	EXISTING DUCTWORK TO BE REMOVED (DEMO)
	SUPPLY DUCTWORK OFFSET UP
	SUPPLY DUCTWORK OFFSET DOWN
	RETURN DUCTWORK OFFSET UP
	RETURN DUCTWORK OFFSET DOWN
	ROUND SUPPLY DUCTWORK OFFSET UP
	ROUND SUPPLY DUCTWORK OFFSET DOWN
	DUCTWORK CAPPED END
	DUCTWORK INTERNAL INSULATION / ACOUSTIC LINING
	FLEXIBLE DUCTWORK CONNECTION
	RECTANGULAR DUCT TRANSITION
	DUCTWORK TRANSITION TO ROUND
	MITERED ELBOW WITH TURNING VANES
	DUCTWORK - SINGLE LINE
(E)	EXISTING DUCTWORK - SINGLE LINE
	DUCTWORK TO ME REMOVED (DEMO) - SINGLE LINE
	SUPPLY DUCTWORK OFFSET UP - SINGLE LINE
	SUPPLY DUCTWORK OFFSET DOWN - SINGLE LINE
	RETURN DUCTWORK OFFSET UP - SINGLE LINE
	RETURN DUCTWORK OFFSET DOWN - SINGLE LINE
	ROUND DUCTWORK OFFSET UP - SINGLE LINE
	ROUND DUCTWORK OFFSET DOWN - SINGLE LINE
	DUCTWORK TRANSITION - SINGLE LINE
	DUCTWORK CAPPED END - SINGLE LINE

100% DESIGN DOCUMENTS

No.	DATE	DESCRIPTION	DESIGNER	REVIEWER

STATE OF CONNECTICUT — JENNIFER L. TYMINSKI — REG. NO. PEN.0032755 — LICENSED PROFESSIONAL ENGINEER

SCALE: HORZ.: NTS VERT.: — DATUM: HORZ.: VERT.: — GRAPHIC SCALE

FUSS & O'NEILL
One Financial Plaza, 15th Floor
Hartford, Connecticut 06103
860.646.2469
www.fando.com

OLD SAYBROOK PUBLIC SCHOOLS

MECHANICAL GENERAL NOTES, SYMBOLS & ABBREVIATIONS

80 BOSTON POST ROAD, OLD SAYBROOK, CT 06475

PROJ. No.: 20210255.A44
DATE: 4/3/2026

M-001

C:\Users\jboudreau\OneDrive - DRMP, Inc\Documents\20210255.A44 - OSES HVAC DESIGN_M - R25_jboudreau062.rvt

LINETYPE LEGEND	
EXISTING	
NEW WORK	

GENERAL NOTES:

1. MOUNT THE DUCT TIGHT TO THE DECK UNLESS OTHERWISE NOTED
2. CONTRACTOR TO COORDINATE FINAL CEILING CASSETTE FCU LOCATIONS IN CEILING GRID. ALL WALL HUNG FCU MUST BE INSTALLED A MINIMUM OF 7'-6" FROM FLOOR.
3. NOT ALL EXISTING EQUIPMENT IS SHOWN. CONTRACTOR TO COORDINATE AND FIELD VERIFY EXISTING CONDITIONS PRIOR TO INSTALLATION.
4. ALL REFRIGERANT PIPING TO BE ROUTED TIGHT TO DECK. WALL PENETRATIONS TO BE SEALED WITH FIRESTOP. SEE MECHANICAL SPECIFICATIONS.

KEYNOTE LEGEND

1. ETR. UNIT HEATER.
2. ETR. UNIT VENTILATOR.
3. ETR. EXHAUST DUCT TO ROOF.
4. DUCT TO PENETRATE WALL OF MULTI-USE ROOM. ROUT TO RTU INSTALLED ON CAFETERIA ROOF.
5. MOUNT THERMOSTAT 4'-0" A.F.F. COORDINATE EXACT LOCATION WITH BUILDING OWNER.

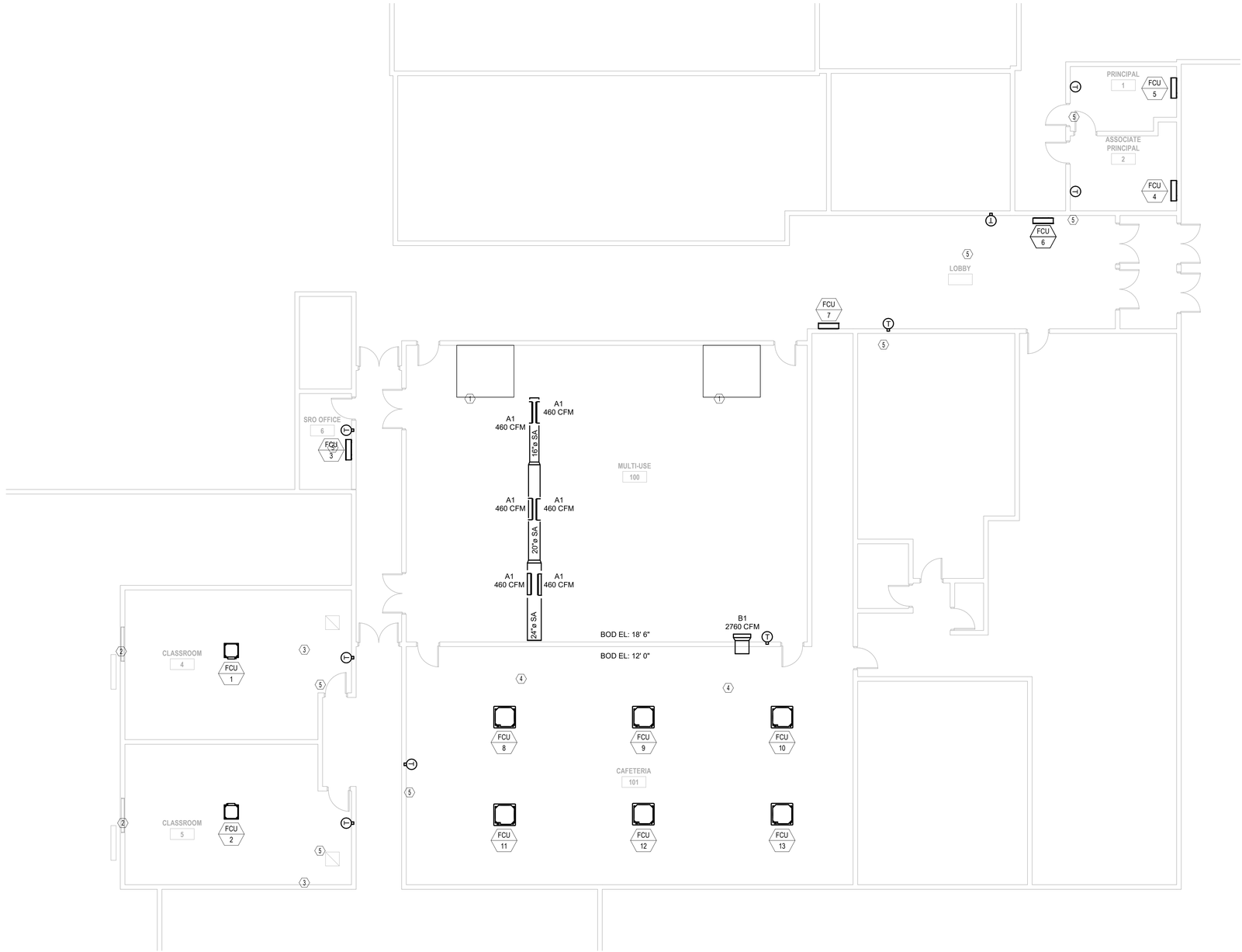

1 FIRST FLOOR MECHANICAL DUCTWORK NEW WORK PLAN
1/8" = 1'-0"

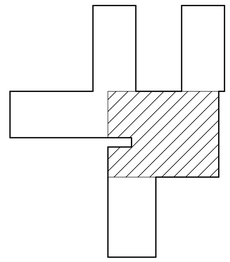

KEY PLAN

100% DESIGN DOCUMENTS

No.	DATE	DESCRIPTION	DESIGNER	REVIEWER

STATE OF CONNECTICUT
JENNIFER L. THURBER
NO. PEN.0032758
LICENSED
PROFESSIONAL ENGINEER

SCALE: 1/8" = 1'=0"
HORZ.:
VERT.:
DATUM:
HORZ.:
VERT.:
8' 2' 6'
4'
GRAPHIC SCALE

FUSS & O'NEILL
One Financial Plaza, 15th Floor
Hartford, Connecticut 06103
860.646.2469
www.fando.com

OLD SAYBROOK PUBLIC SCHOOLS
MECHANICAL FIRST FLOOR DUCTWORK PLAN
80 BOSTON POST ROAD, OLD SAYBROOK, CT 06475

PROJ. No.: 20210255.A44
DATE: 4/3/2026

M-101

C:\Users\jboudreau\OneDrive - DRMP, Inc\Documents\20210255.A44 - OSES HVAC DESIGN_M - R25_jboudreau062.rvt

LINETYPE LEGEND	
EXISTING	
NEW WORK	

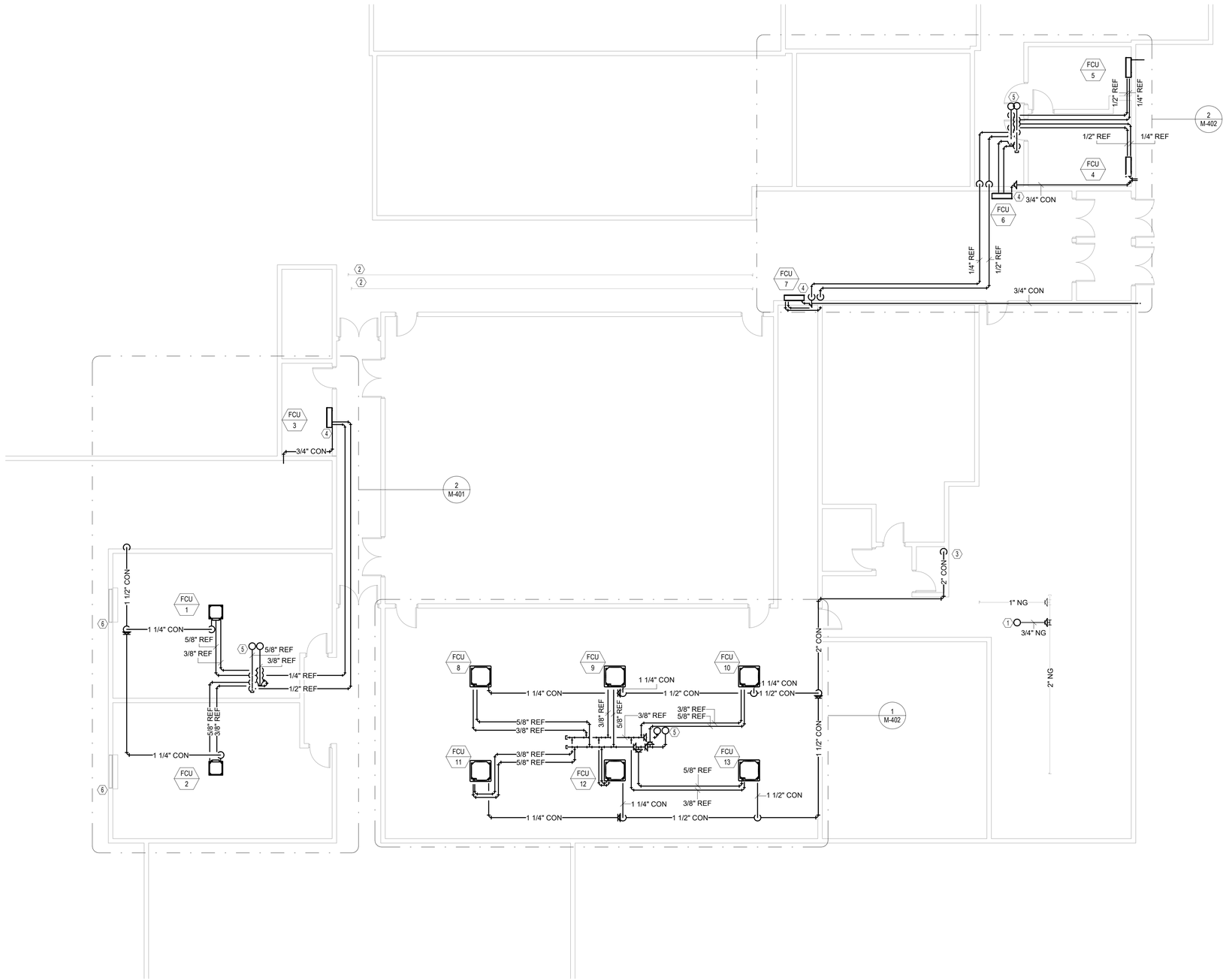

1 REFRIGERANT PIPING NEW WORK PLAN
1/8" = 1'-0"

GENERAL NOTES:

1. ALL CONDENSATE PIPE SHALL BE SLOPED 1/8" PER FOOT TOWARDS DRAIN OUTLET
2. ALL REFRIGERANT PIPING TO BE ROUTED TIGHT TO DECK. WALL PENETRATIONS TO BE SEALED WITH FIRE STOP. SEE MECHANICAL SPECIFICATIONS.

KEYNOTE LEGEND

1. NATURAL GAS PIPING DOWN FROM ROOF TO EXISTING TO REMAIN GAS PIPING CONNECTION IN BOILER ROOM.
2. HYDRONIC PIPING EXISTING TO REMAIN.
3. CONDENSATE PIPING DOWN TO JAN SINK. PROVIDE 2-6" AIR GAP.
4. PROVIDE CONDENSATE PUMP. SEE M-601 FOR SELECTION.
5. PIPING UP TO CONDENSER ON ROOF. SEE M-121 FOR CONTINUATION.
6. REMOVE PATCH AND INSTALL LOUVER. CONTRACTOR TO VERIFY UNIT VENTILATOR OPERATION. ADJUST TO PROVIDE 400 CFM OF OA.

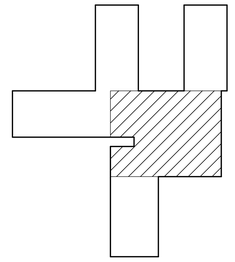

KEY PLAN

100% DESIGN DOCUMENTS

No.	DATE	DESCRIPTION	DESIGNER	REVIEWER

STATE OF CONNECTICUT
JENNIFER L. THURBER
NO. PEN.0032758
LICENSED
PROFESSIONAL ENGINEER

SCALE: 1/8" = 1'=0"
HORZ.:
VERT.:
DATUM:
HORZ.:
VERT.:
GRAPHIC SCALE

FUSS & O'NEILL
One Financial Plaza, 15th Floor
Hartford, Connecticut 06103
860.646.2469
www.fando.com

OLD SAYBROOK PUBLIC SCHOOLS
FIRST FLOOR - MECHANICAL PIPING NEW WORK PLAN
80 BOSTON POST ROAD, OLD SAYBROOK, CT 06475

PROJ. No.: 20210255.A44
DATE: 4/3/2026

M-102

C:\Users\jboudreau\OneDrive - DRMP, Inc\Documents\20210255.A44 - OSES HVAC DESIGN_M - R25_jboudreau062.rvt

LINETYPE LEGEND	
EXISTING	
NEW WORK	

GENERAL NOTES:

1. MOUNT THE DUCT TIGHT TO THE DECK UNLESS OTHERWISE NOTED
2. CONTRACTOR TO COORDINATE FINAL CEILING CASSETTE FCU LOCATIONS IN CEILING GRID. ALL WALL HUNG FCU MUST BE INSTALLED A MINIMUM OF 7'-6" FROM FLOOR.
3. NOT ALL EXISTING EQUIPMENT IS SHOWN. CONTRACTOR TO COORDINATE AND FIELD VERIFY EXISTING CONDITIONS PRIOR TO INSTALLATION.
4. ALL REFRIGERANT PIPING TO BE ROUTED TIGHT TO DECK. WALL PENETRATIONS TO BE SEALED WITH FIRESTOP. SEE MECHANICAL SPECIFICATIONS.

KEYNOTE LEGEND

1. VRF CONDENSING UNIT. PROVIDE STAND AND RUBBER VIBRATION ISOLATION ON ROOF.
2. REFRIGERANT PIPING FROM CU DOWN TO PIPE HEADER IN PLENUM. SEE M-101 FOR CONTINUATION.
3. REUSE EXISTING LOUVER PENETRATION FOR SUPPLY AND RETURN DUCT. INFILL WALL AND SEAL WEATHER TIGHT. (NOT USED)
4. SUPPORT EXTERIOR DUCTWORK FROM ROOF DECK. SEE DETAIL 1/M-501.
5. EXHAUST HOOD EXISTING TO REMAIN (ETR).
6. NATURAL GAS PIPING TO EXISTING GAS PIPING ON ROOF.
7. HYDRONIC PIPING EXISTING TO REMAIN (ETR).
8. DUCT CONNECTION TO PLENUM CURB PER MANUFACTURER.

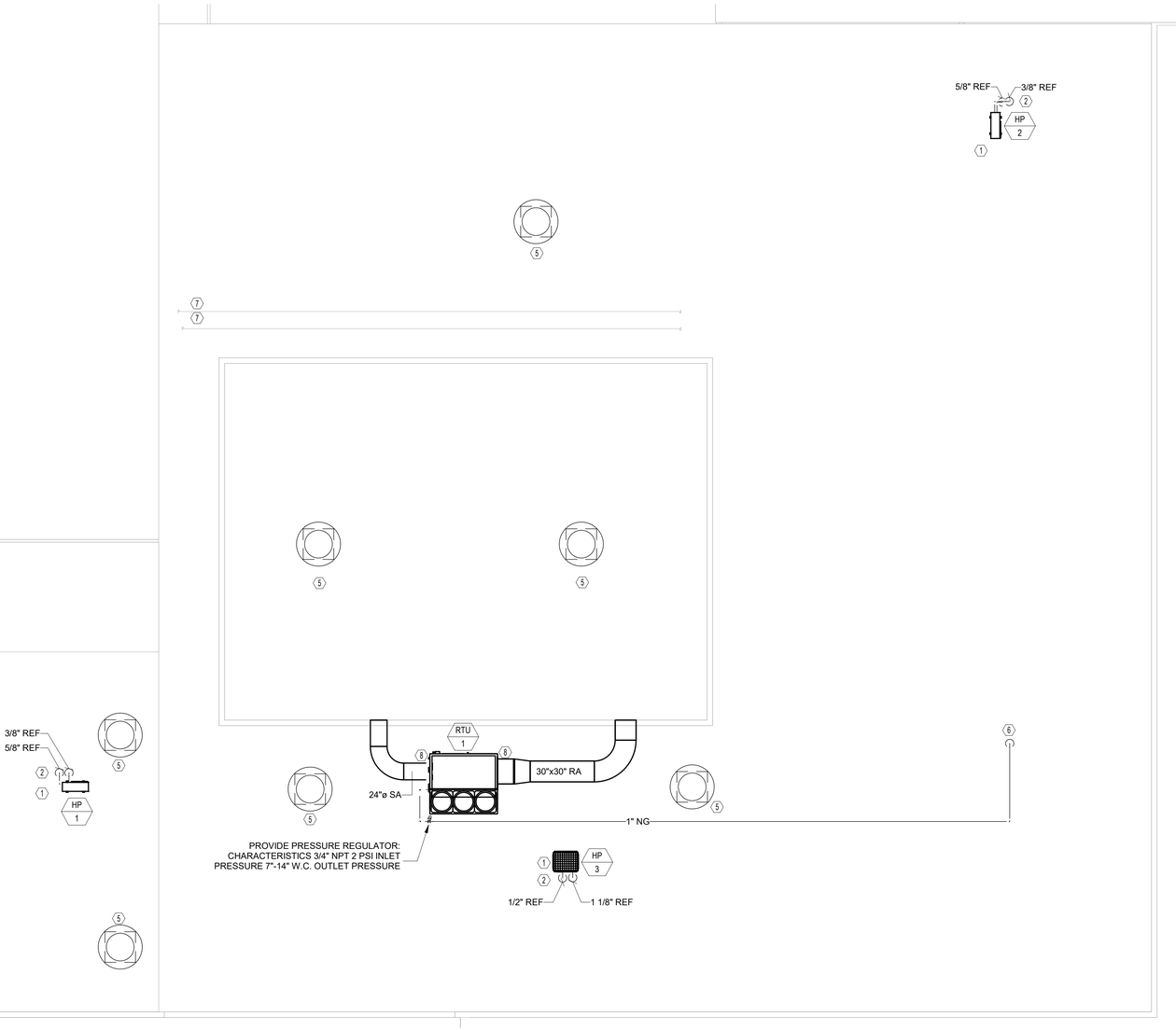

1 MECHANICAL ROOF PLAN NEW
1/8" = 1'-0"

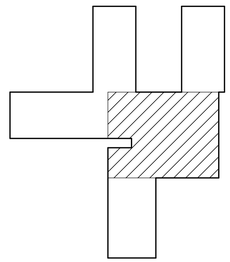

KEY PLAN

100% DESIGN DOCUMENTS

No.	DATE	DESCRIPTION	DESIGNER	REVIEWER

STATE OF CONNECTICUT
JENNIFER L. THOMPSON
REG. NO. PEN.0032758
LICENSED
PROFESSIONAL ENGINEER

SCALE: 1/8" = 1'-0"
HORZ.:
VERT.:
DATUM:
HORZ.:
VERT.:
GRAPHIC SCALE
0 4" 8"

FUSS & O'NEILL
One Financial Plaza, 15th Floor
Hartford, Connecticut 06103
860.646.2469
www.fando.com

OLD SAYBROOK PUBLIC SCHOOLS
MECHANICAL ROOF PLAN
80 BOSTON POST ROAD, OLD SAYBROOK, CT 06475

PROJ. No.: 20210255.A44
DATE: 4/3/2026

M-121

C:\Users\jboudreau\OneDrive - DRMP, Inc\Documents\20210255.A44 - OSES HVAC DESIGN_M - R25_jboudreau062.rvt

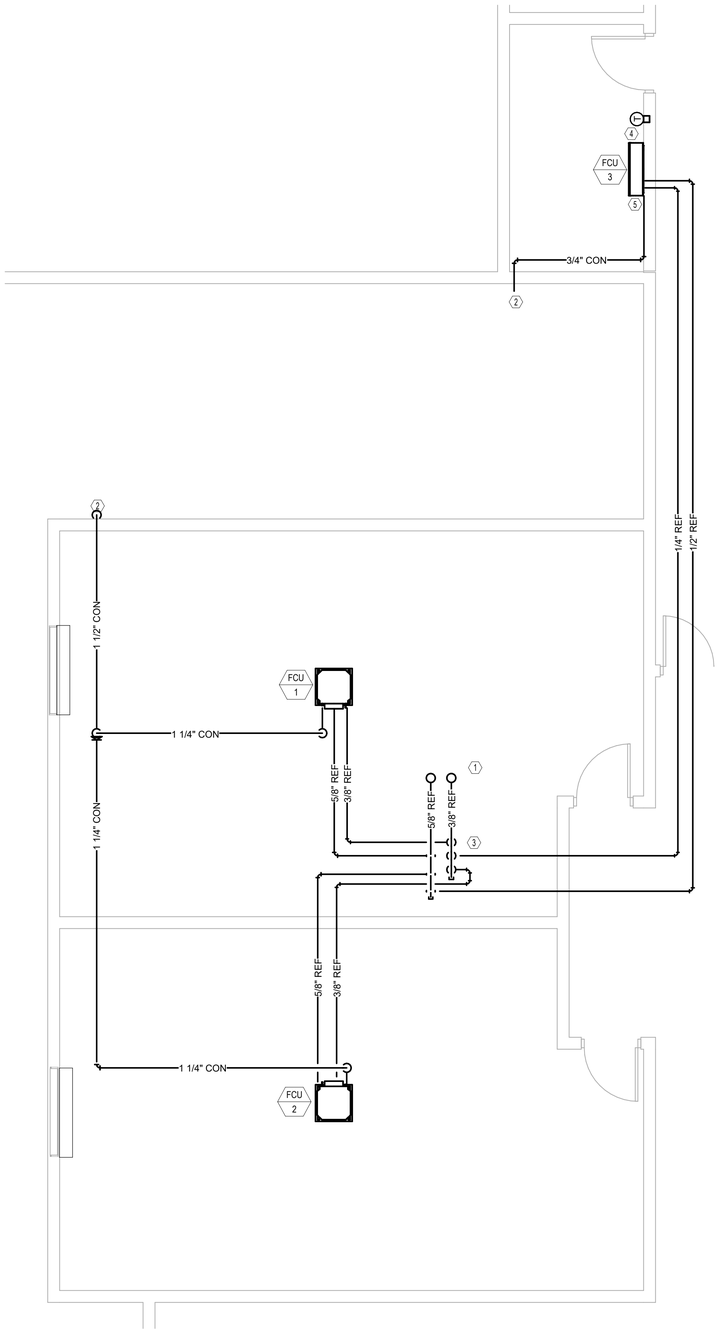

2 CLASSROOM 4&5 AND GYM OFFICE REFRIGERANT PIPING PLAN
1/4" = 1'-0"

LINETYPE LEGEND	
EXISTING	
NEW WORK	

GENERAL NOTES:
1. ROUTE REFRIGERANT PIPING TIGHTLY TO WALL / STRUCTURE UNLESS OTHERWISE NOTED.
2. ROUTE DUCTWORK TIGHTLY TO WALL / STRUCTURE UNLESS OTHERWISE NOTED.
3. ALL CONDENSATE PIPE SLOPED AT 1/8TH INCH PER FOOT
4. CONTRACTOR TO COORDINATE FINAL FCU LOCATIONS IN CEILING GRID

KEYNOTE LEGEND

1. REFRIGERANT PIPING UP TO CONDENSER ON ROOF. SEE M-121 FOR CONTINUATION.
2. CONDENSATE PIPING THROUGH EXTERIOR WALL. SEE DETAIL 3/M-501 FOR CONTINUATION.
3. MITSUBISHI TEE HEADER. INSTALL IN PLENUM.
4. WALL HUNG UNITS TO BE INSTALLED AT A MINIMUM OF 7'-6" FROM FLOOR.
5. PROVIDE CONDENSATE PUMP SEE SCHEDULE FOR SELECTION.

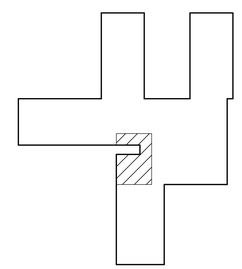

KEY PLAN

100% DESIGN DOCUMENTS

No.	DATE	DESCRIPTION	DESIGNER	REVIEWER



SCALE: 1/4" = 1'-0"
HORZ.:
VERT.:
DATUM:
HORZ.:
VERT.:
GRAPHIC SCALE 0 1' 2' 3' 4'

FUSS & O'NEILL
One Financial Plaza, 15th Floor
Hartford, Connecticut 06103
860.646.2469
www.fando.com

OLD SAYBROOK PUBLIC SCHOOLS
MECHANICAL ENLARGED PLANS - CLASSROOM 4 & 5
80 BOSTON POST ROAD, OLD SAYBROOK, CT 06475

PROJ. No.: 20210255.A44
DATE: 4/3/2026

M-401

C:\Users\jboudreau\OneDrive - DRMP, Inc\Documents\20210255.A44 - OSES HVAC DESIGN_M - R25_jboudreau062.rvt

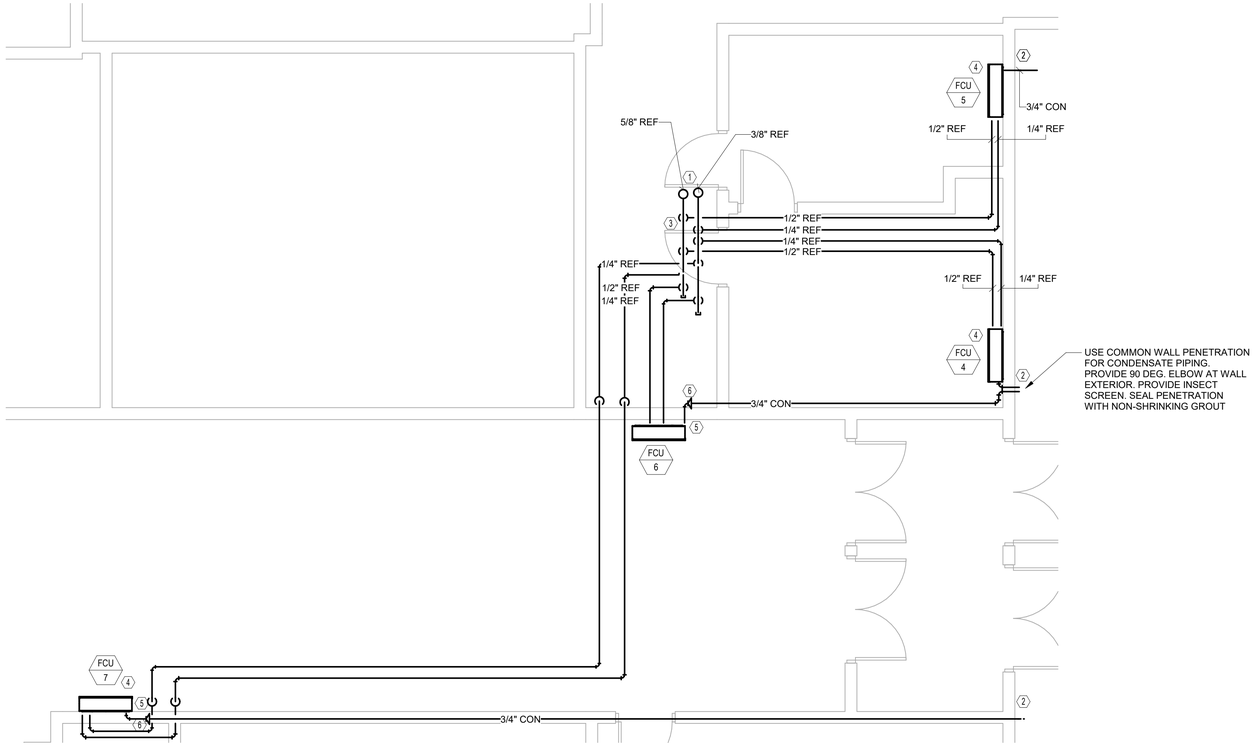

2 M-402 FIRST FLOOR CONFERENCE ROOMS REFRIGERANT PIPING - ENLARGED VIEW
1/4" = 1'-0"

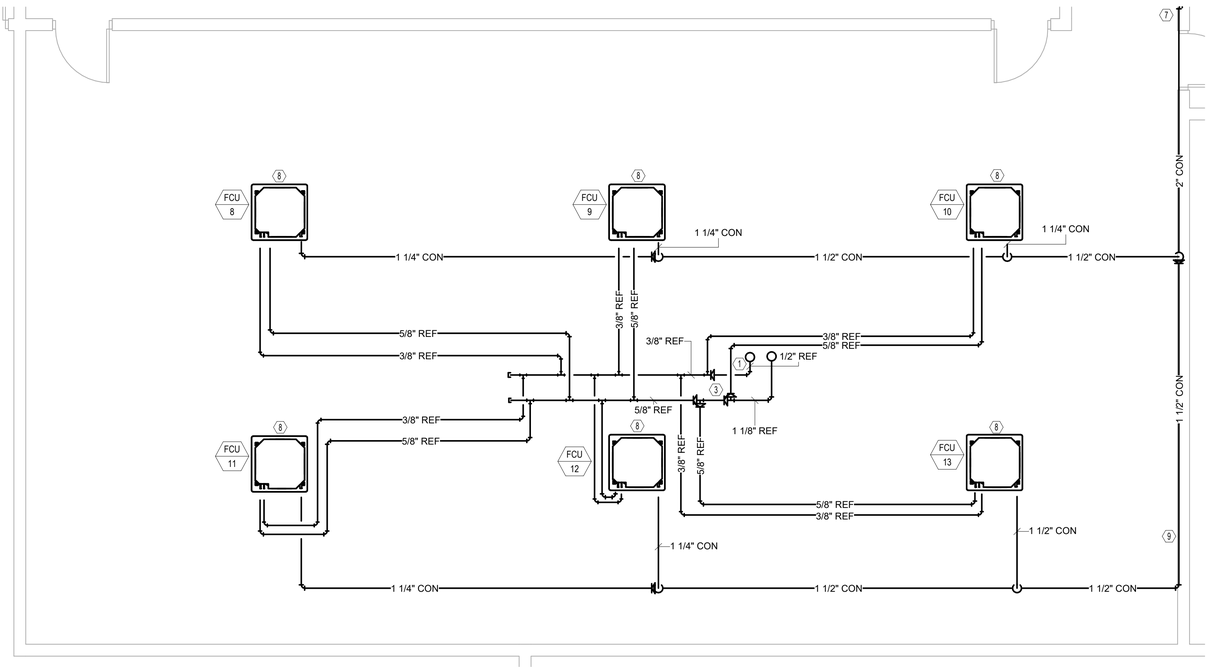

1 M-402 CAFETERIA REFRIGERANT PIPING - ENLARGED VIEW
1/4" = 1'-0"

LINETYPE LEGEND	
EXISTING	
NEW WORK	

GENERAL NOTES:
1. ROUTE REFRIGERANT PIPING TIGHTLY TO WALL / STRUCTURE UNLESS OTHERWISE NOTED.
2. ROUTE DUCTWORK TIGHTLY TO WALL / STRUCTURE UNLESS OTHERWISE NOTED.
3. ALL CONDENSATE PIPE SLOPED AT 1/8TH INCH PER FOOT

KEYNOTE LEGEND

1. REFRIGERANT PIPING UP TO CONDENSER ON ROOF. SEE M-121 FOR CONTINUATION.
2. CONDENSATE PIPING THROUGH EXTERIOR WALL. SEE 3/M-501.
3. MITSUBISHI TEE HEADER. INSTALL IN PLENUM.
4. WALL HUNG UNITS TO BE INSTALLED AT A MINIMUM OF 7'-6" FROM FLOOR.
5. PROVIDE CONDENSATE PUMP. SEE SCHEDULE FOR SELECTION
6. INCREASE CONDENSATE PIPE SIZE. PROVIDE BARBED CONNECTION
7. 2" CONDENSATE PIPING TO JAN CLOSET. SEE M-102 FOR CONTINUATION
8. CONTRACTOR TO COORDINATE FINAL FCU LOCATIONS IN CEILING GRID.
9. ROUTE CONDENSATE PIPING ALONG WALL WITHIN PLENUM. MAINTAIN 1/8" PER FOOT SLOPE TOWARD DRAIN.

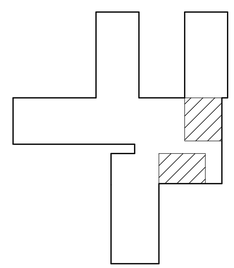

KEY PLAN

100% DESIGN DOCUMENTS

No.	DATE	DESCRIPTION	DESIGNER	REVIEWER

STATE OF CONNECTICUT
JENNIFER L. THURBER
NO. PEN.0032758
LICENSED
PROFESSIONAL ENGINEER

SCALE: 1/4" = 1'=0"
HORZ.:
VERT.:
DATUM:
HORZ.:
VERT.:
4' 1' 3'
GRAPHIC SCALE

FUSS & O'NEILL
One Financial Plaza, 15th Floor
Hartford, Connecticut 06103
860.646.2469
www.fando.com

OLD SAYBROOK PUBLIC SCHOOLS
MECHANICAL ENLARGED PLANS - CAFETERIA AND ADMIN OFFICES
80 BOSTON POST ROAD, OLD SAYBROOK, CT 06475

PROJ. No.: 20210255.A44
DATE: 4/3/2026

M-402

C:\Users\jboudreau\OneDrive - DRMP, Inc\Documents\20210255.A44 - OSES HVAC DESIGN_M - R25_jboudreau062.rvt

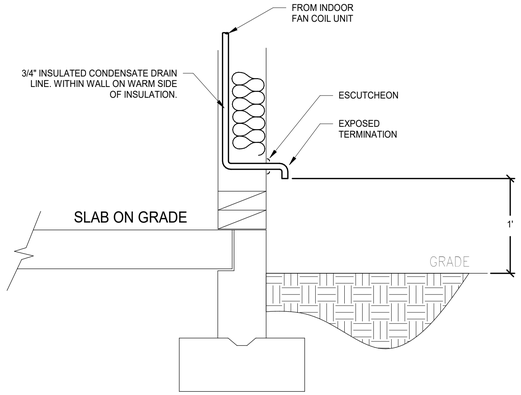

3 PIPING DETAIL - EXTERIOR CONDENSATE DRAIN DETAIL
N.T.S

NOTES:
1. PROVIDE VOLUME DAMPER OR OPPOSED BLADE DAMPER AT REGISTER AS NOTED.
2. DUCTWORK SHALL BE GALVANIZED STEEL WITH SPIRAL LOCK SEAM OUTTER SHELL WITH MIN. 1" THICK GLASS FIBER INSULATION AND PERFORATED INNER WALL. FITTINGS SHALL BE SLIP-TYPE. FACTORY BUILT DOUBLE WALL SPIRAL DUCT AND FITTINGS SHALL BE AS MANUFACTURERED BY LINDAB OR APPROVED EQUAL.

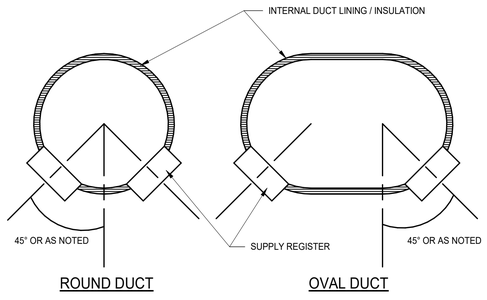

4 TYPICAL SPIRAL DUCT SUPPLY REGISTER DETAIL
N.T.S

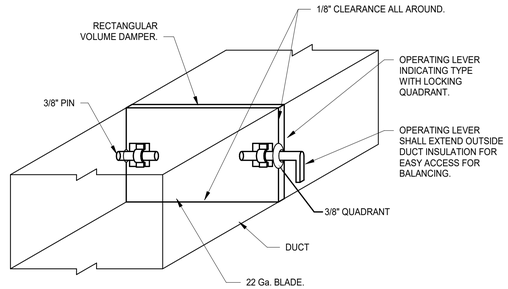

6 TYPICAL VOLUME DAMPER DETAIL
N.T.S

2 EXTERIOR DUCTWORK SUPPORTING/INSULATION DETAIL
N.T.S

5 RTU GAS CONNECTION DETAIL
N.T.S

1 VRV/VRF HEAT PUMP SUPPORT AND INSTALLATION DETAIL
N.T.S

PIPING NOTES:

1. EQUIPMENT SHALL BE PIPED AS INDICATED. HEAT RECOVERY TYPE HEAT PUMP SYSTEMS HAVE (3) THREE REFRIGERANT PIPES FROM THE HEAT PUMP TO THE INDOOR BRANCH SELECTOR BOX.
2. THE INSTALLING CONTRACTOR SHALL BE RESPONSIBLE FOR DOCUMENTING EXACT REFRIGERANT PIPING LENGTH. FINAL PIPING LENGTHS WILL BE INPUT INTO THE SYSTEM SELECTION SOFTWARE TO DETERMINE FINAL REFRIGERANT CHARGE.
3. PIPE LENGTHS SHALL NOT EXCEED INDICATED LENGTHS WITHOUT APPROVAL FROM THE MANUFACTURER. IF LENGTHS ARE EXCEEDED, RESULTS SHALL BE UPDATED IN THE SELECTION SOFTWARE AND SUBMITTED TO THE ENGINEER FOR REVIEW AND APPROVAL PRIOR TO PURCHASE OR INSTALLATION OF EQUIPMENT.
4. INSTALL PIPING AND EQUIPMENT IN STRICT CONFORMANCE WITH MANUFACTURER'S INSTRUCTIONS.
5. PROVIDE ISOLATION VALVES AT EACH BRANCH PIPE AT BRANCH BOXES.
6. REFRIGERANT PIPING SHALL NOT COME IN CONTACT WITH OTHER REFRIGERANT PIPING, UNIT PANELS OR BASE PLATES.
7. ALL REFRIGERANT PIPING FROM HEAT PUMP SHALL BE INSTALLED INCLINED DOWNWARD TO THE INDOOR UNIT SIDE.

HEAT PUMP NOTES:

1. SEE PLANS, SPECS, AND DETAILS FOR FURTHER REQUIREMENTS.
2. MAINTAIN MANUFACTURER'S REQUIRED CLEARANCES.
3. PROVIDE UNISTRUT SUPPORT STANDS ON BIG FOOT (OR EQUIVALENT) FOOTERS TO SUPPORT REFRIGERANT PIPING. SUPPORTS SHALL BE SPACED 3'-0" ON CENTER.
4. FOLLOW ALL MANUFACTURER'S INSTALLATION AND TESTING PROCEDURES AND REQUIREMENTS FOR ALL REFRIGERANT PIPING AND SYSTEMS.
5. FOLLOW ALL MANUFACTURER INSTALLATION ND TESTING PROCEDURES AND REQUIREMENTS FOR ALL REFRIGERANT PIPING ANS SYSTEMS.
6. PROVIDE OWNER TRAINING FOR PROPER OPERATION.
7. PROVIDE SHOP DRAWING FOR STAND.
8. CONDENSING UNIT SUPPORT STAND SHALL BE RATED FOR 128 MPH WITHOUT ATTACHMENT TO STRUCTURE. CONFIGURE STAND AS INDICATED ON PLANS.

100% DESIGN DOCUMENTS

No.	DATE	DESCRIPTION	DESIGNER	REVIEWER

STATE OF CONNECTICUT
JENNIFER L. TUMMINO
REG. NO. PEN.0032755
LICENSED
PROFESSIONAL ENGINEER

SCALE: HORZ.: NTS VERT.:
DATUM: HORZ.: VERT.:
GRAPHIC SCALE

FUSS & O'NEILL
One Financial Plaza, 15th Floor
Hartford, Connecticut 06103
860.646.2469
www.fando.com

OLD SAYBROOK PUBLIC SCHOOLS
MECHANICAL DETAILS
80 BOSTON POST ROAD, OLD SAYBROOK, CT 06475

PROJ. No.: 20210255.A44
DATE: 4/3/2026

M-501

C:\Users\jboudreau\OneDrive - DRMP, Inc\Documents\20210255.A44 - OSES HVAC DESIGN_M - R25_jboudreau062.rvt

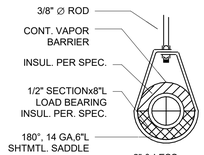

2" & LESS
ALL PIPING

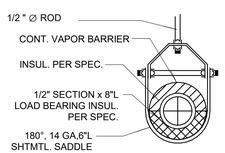

2-1/2" & 3"
ALL PIPING

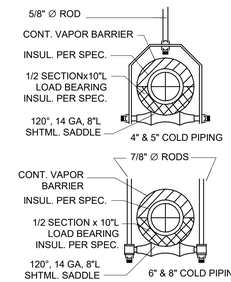

4" & 5" COLD PIPING

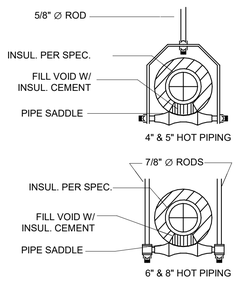

4" & 5" HOT PIPING

6" & 8" COLD PIPING

6" & 8" HOT PIPING

3 TYPICAL PIPE HANGER DETAIL

N.T.S

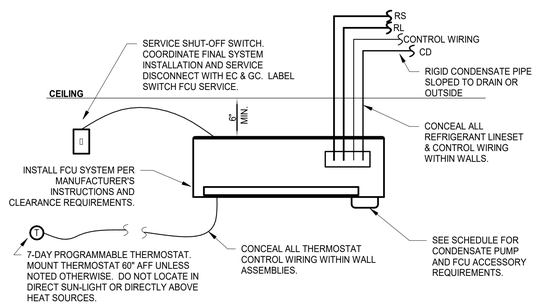

NOTES:

1. COORDINATE WITH BUILDING OWNER & EC PRIOR TO INSTALLATION.
2. CONFIRM ALL FINAL FCU AND THERMOSTAT LOCATIONS IN FIELD WITH OWNER'S REP PRIOR TO INSTALLATION.
3. ALL REFRIGERANT PIPING, CONDENSATE DRAIN AND CONTROL WIRING SHALL CONCEALED WITHIN WALL CAVITIES.
4. INSULATE RS, RL AND CONDENSATE PIPING WITH CONTINUOUS VAPOR BARRIER PER SPECIFICATIONS.

1 EQUIPMENT DETAIL - WALL-MOUNTED DUCTLESS FAN COIL UNIT

N.T.S

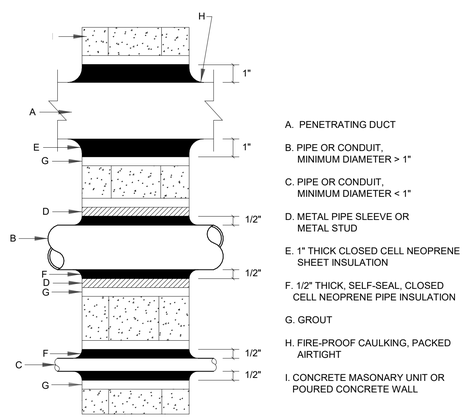

A. PENETRATING DUCT

B. PIPE OR CONDUIT, MINIMUM DIAMETER > 1"

C. PIPE OR CONDUIT, MINIMUM DIAMETER < 1"

D. METAL PIPE SLEEVE OR METAL STUD

E. 1" THICK CLOSED CELL NEOPRENE SHEET INSULATION

F. 1/2" THICK, SELF-SEAL, CLOSED CELL NEOPRENE PIPE INSULATION

G. GROUT

H. FIRE-PROOF CAULKING, PACKED AIRTIGHT

I. CONCRETE MASONARY UNIT OR POURED CONCRETE WALL

2 TYPICAL MASONRY WALL PENETRATION DETAIL

N.T.S

100% DESIGN DOCUMENTS

No.	DATE	DESCRIPTION	DESIGNER	REVIEWER

STATE OF CONNECTICUT
JENNIFER L. THOMAS
REG. NO. PEN.0032755
LICENSED
PROFESSIONAL ENGINEER

SCALE: HORZ.: NTS VERT.:
DATUM: HORZ.: VERT.:
GRAPHIC SCALE

FUSS & O'NEILL
One Financial Plaza, 15th Floor
Hartford, Connecticut 06103
860.646.2469
www.fando.com

OLD SAYBROOK PUBLIC SCHOOLS
MECHANICAL DETAILS
80 BOSTON POST ROAD, OLD SAYBROOK, CT 06475

PROJ. No.: 20210255.A44
DATE: 4/3/2026

M-502

C:\Users\jboudreau\OneDrive - DRMP, Inc\Documents\20210255.A44 - OSES HVAC DESIGN_M - R25_jboudreau062.rvt

POINTS DESCRIPTION	POINTS								ALARMS						
	ANALOG HARDWARE INPUT (AI)	BINARY HARDWARE INPUT (BI)	ANALOG HARDWARE OUTPUT (AO)	BINARY HARDWARE OUTPUT (BO)	SOFTWARE POINT (SFT)	HARDWARE INTERLOCK (HDW)	WIRELESS (WLS)	NETWORK (NET)	HIGH ANALOG LIMIT	LOW ANALOG LIMIT	BINARY	LATCH DIAGNOSTIC	SENSOR FAIL	COMMUNICATION FAIL
COOLING COIL LEAVING AIR TEMPERATURE (CC...	X								X	X			X	
COOLING COIL OUTPUT COMMAND (CV-1)			X											
HEATING COIL OUTPUT COMMAND (HV-1)			X											
FEEZESTAT LOW LIMIT (LT)				X										
OUTDOOR AIR DAMPER COMMAND (OAD)			X											
OUTDOOR AIR ENTHALPY SENSOR (ES)	X				X									
RELATIVE HUMIDITY SENSOR (RH)	X				X									
RETURN AIR ENTHALPY SENSOR (ES)	X				X									
OUTDOOR AIR TEMPERATURE LOCAL (OAT)	X													
RETURN AIR DAMPER COMMAND (RAD)			X											
RETURN SMOKE DETECTOR INPUT (DSD)						X								
SUPPLY FAN SPEED COMMAND			X											
FILTER DIRTY DIFFERENTIAL PRESSURE SWITCH...		X												
REFRIGERANT LEAK DETECTION					X				X					
DISCHARGE AIR COOLING SETPOINT					X									
DISCHARGE AIR HEATING SETPOINT					X									
OCCUPIED COOLING SETPOINT					X									
OCCUPIED HEATING SETPOINT					X									
UNOCCUPIED HEATING SETPOINT					X									

RTU-1

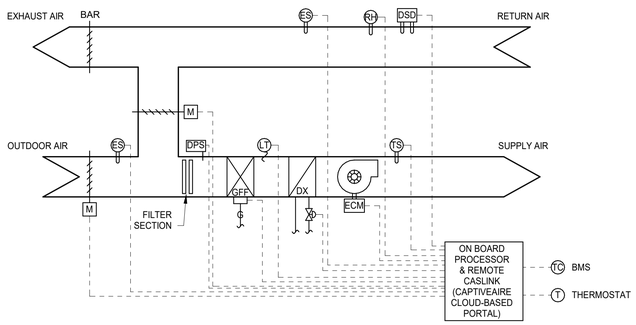

RTU SEQUENCE OF OPERATION

THE ROOFTOP UNIT SHALL BE CONTROLLED THROUGH THE PACKAGED ROOFTOP CONTROL PANEL (APPLICATIONS SPECIFIC CONTROLLER) AND THE BUILDING MANAGEMENT SYSTEM (BMS). THE UNIT ALSO OFFERS CAPTIVEAIRE CASLINK REMOTE MONITORING. THE UNITS SCHEDULE SHALL BE DETERMINED BY THE BMS. THE SEQUENCE LISTED BELOW IS REVERSIBLE UNLESS NOTED OTHERWISE. ALL POINTS READ BY UNIT CAN BE SEEN BY THE BMS.

OCCUPIED HOURS:
1. THE UNITS SUPPLY FAN SHALL ENERGIZE AND OPERATE CONTINUOUSLY.
2. THE OUTDOOR AIR DAMPER SHALL MODULATE OPEN TO SUPPLY 1500 CFM (ADJ.), AND THE RETURN AIR DAMPER SHALL OPEN TO PROVIDE FURTHER AIRFLOW NEEDED FOR SPACE CONDITIONING.
3. THE EXHAUST AIR DAMPER OR BAROMETRIC RELIEF DAMPER SHALL OPEN AS REQUIRED TO MAINTAIN 0.03" W.C. BUILDING PRESSURE

HEATING MODE:
1. UPON A CALL FOR HEAT FROM THE SPACE THERMOSTAT, THE UNIT SHALL FIRST OPERATE IN HEAT PUMP MODE (DX HEATING) TO MAINTAIN THE SPACE TEMPERATURE SETPOINT OF 70°F (ADJ).
2. THE HEAT PUMP SHALL MODULATE CAPACITY TO MAINTAIN THE SPACE TEMPERATURE SETPOINT.
3. IF THE HEAT PUMP IS UNABLE TO MAINTAIN THE SPACE TEMPERATURE SETPOINT, OR IF OUTDOOR AIR TEMPERATURE FALLS BELOW 35 °F (ADJ), THE GAS FIRE FURNACE SHALL ENERGIZE AND MODULATE CONTINUOUSLY TO MAINTAIN THE SPACE TEMPERATURE SETPOINT OF 70°F (ADJ).
4. THE UNIT SHALL ENTER DEFROST MODE AS SET BY THE PACKAGED CONTROLLER. THE GAS FIRE FURNACE SHALL OPERATE WHEN IN DEFROST MODE TO MAINTAIN TEMPERATURE SETPOINT OF 70°F (ADJ).
2. UPON SATISFACTION OF THE SPACE TEMPERATURE SETPOINT, THE GAS FIRED FURNACE SHALL DE-ENERGIZE.

COOLING MODE:
1. UPON A CALL FOR COOLING FROM THE SPACE TEMPERATURE THERMOSTAT, THE COOLING SEQUENCE SHALL ACTIVATE AND OPERATE THROUGH THE STAGES OF COOLING TO MAINTAIN THE SPACE TEMPERATURE SETPOINT OF 75°F (ADJ.).
2. UPON SATISFACTION OF THE SPACE TEMPERATURE SETPOINT, THE UNIT'S COOLING SEQUENCE SHALL DEACTIVATE.

DEHUMIDIFICATION:
1. UPON A READING OF GREATER THAN 60% RELATIVE HUMIDITY FROM THE RH SENSOR DE-HUMIDIFICIATION MODE SHALL ACTIVATE.
2. THE PACKAGED CONTROLLER MANAGES ALL MODULATION TO MANAGE RELATIVE HUMIDITY.
3. THE SPACE TEMPERATURE WILL BE ALLOWED TO DRIFT TO A MINIMUM OF 72°F (ADJ.) DURING DEHUMIDIFICATION MODE.
4. ONCE THE SPACE DROPS BELOW 55% RH (ADJ.) THE SYSTEM SHALL RETURN TO NORMAL OPERATION.

ECONOMIZER OPERATION:
1. ECONOMIZER MODE SHALL BE THE FIRST STAGE OF COOLING.
2. IF COOLING IS REQUIRED AND THE RETURN AIR ENTHALPY IS HIGHER THAN THE OUTDOOR AIR ENTHALPY, THE DX CONDENSING UNIT SHALL DE-ENERGIZE, AND THE FAN SHALL OPERATE CONTINUOUSLY TO LOWER THE SUPPLY AIR TEMPERATURE, BUT NOT LOWER THAN 58°F(ADJ.).
3. IF FURTHER COOLING IS REQUIRED, OR IF THE RETURN AIR ENTHALPY IS LOWER THAN THE OUTDOOR AIR ENTHALPY, THE DX CONDENSING UNIT SHALL ENERGIZE, AND THE ROOFTOP UNIT SHALL OPERATE THROUGH ITS STAGES OF COOLING TO MAINTAIN THE SPACE TEMPERATURE SETPOINT.

UNOCCUPIED HOURS:
1. THE UNIT'S SUPPLY FAN SHALL DE-ENERGIZE; THE UNIT'S OUTDOOR AIR AND RETURN AIR DAMPERS SHALL BE IN THE 100% RETURN POSITION.

HEATING MODE:
1. UPON A CALL FOR HEAT FROM THE SPACE THERMOSTAT, THE UNIT SHALL FIRST OPERATE IN HEAT PUMP MODE (DX HEATING) TO MAINTAIN THE SPACE TEMPERATURE SETPOINT OF 55°F (ADJ).
2. THE HEAT PUMP SHALL MODULATE CAPACITY TO MAINTAIN THE SPACE TEMPERATURE SETPOINT.
3. IF THE HEAT PUMP IS UNABLE TO MAINTAIN THE SPACE TEMPERATURE SETPOINT, OR IF OUTDOOR AIR TEMPERATURE FALLS BELOW 35 °F (ADJ), THE GAS FIRE FURNACE SHALL ENERGIZE AND MODULATE CONTINUOUSLY TO MAINTAIN THE SPACE TEMPERATURE SETPOINT OF 55°F (ADJ).
4. THE UNIT SHALL ENTER DEFROST MODE AS SET BY THE PACKAGED CONTROLLER. THE GAS FIRE FURNACE SHALL OPERATE WHEN IN DEFROST MODE TO MAINTAIN TEMPERATURE SETPOINT OF 55°F (ADJ).
2. UPON SATISFACTION OF THE SPACE TEMPERATURE SETPOINT, THE GAS FIRED FURNACE SHALL DE-ENERGIZE

COOLING MODE:
1. COOLING SHALL BE LOCKED OUT DURING UNOCCUPIED HOURS.

SAFETY PROTECTION SEQUENCES:
1. FREEZE PROTECTION: IF DISCHARGE AIR TEMPERATURE DROPS BELOW 40°F, THE UNIT SHALL DISABLE COOLING SEQUENCE, CONTINUE FAN OPERATION, AND TRIGGER AN ALARM TO PREVENT COIL DAMAGE
2. CONDENSATE OVERFLOW: FACTORY INSTALLED FLOAT DE-ENERGIZES UNITS COOLING WHEN TRIPPED.
3. DUCT SMOKE DETECTION: UPON SIGNAL FROM THE DUCT SMOKE DETECTOR, THE UNIT SHALL DE-ENERGIZE AND TRIGGER AN ALARM.
4. FACTORY INSTALL FILTER DIFFERENTAIL PRESSURE SWITCH SHALL TRIGGER AN ALARM IF THE FILTER BECOMES CLOGGED
5. UPON DETECTION OF REFRIGERENT LEAK THE COMPRESSOR AND GAS FIRED FURNACE ARE LOCKED OUT. THE SUPPLY FAN IS FORCED TO FULL SPEED AND AN ALARM IS ANNUNCIATED AT THE BMS.

1 RTU SEQUENCE OF OPERATION
N.T.S

POINTS DESCRIPTION	POINTS								ALARMS						
	ANALOG HARDWARE INPUT (AI)	BINARY HARDWARE INPUT (BI)	ANALOG HARDWARE OUTPUT (AO)	BINARY HARDWARE OUTPUT (BO)	SOFTWARE POINT (SFT)	HARDWARE INTERLOCK (HDW)	WIRELESS (WLS)	NETWORK (NET)	HIGH ANALOG LIMIT	LOW ANALOG LIMIT	BINARY	LATCH DIAGNOSTIC	SENSOR FAIL	COMMUNICATION FAIL
INDOOR UNIT TEMPERATURE SENSOR (TS)	X								X	X			X	
RELATIVE HUMIDITY (RH)			X											
HEATING COMMAND			X											
REFRIGERANT LEAK DETECTION					X					X				
OCCUPIED COOLING SETPOINT					X									
OCCUPIED HEATING SETPOINT					X									
UNOCCUPIED HEATING SETPOINT					X									

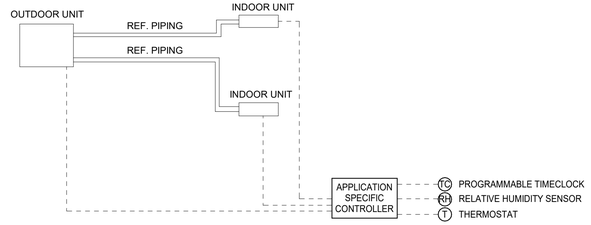

VRF SEQUENCE OF OPERATION

THE VARIABLE REFRIGERANT FLOW (VRF) SHALL BE CONTROLLED THROUGH ONBOARD CONTROL PANEL (APPLICATION SPECIFIC CONTROLLER) AND THE PROGRAMMABLE TIMECLOCK. THE SEQUENCE LISTED BELOW IS REVERSIBLE UNLESS NOTED OTHERWISE.

OCCUPIED HOURS:

HEATING MODE:
1. UPON A CALL FOR HEAT FROM THE SPACE THERMOSTAT, BOTH OUTDOOR AND INDOOR UNITS SHALL ENERGIZE AND OPERATE CONTINUOUSLY TO MAINTAIN THE SPACE TEMPERATURE SETPOINT OF 70°F (ADJ).
2. THE UNIT SHALL MODULATE PER FACTORY SETTINGS TO MAINTAIN SETPOINT EFFICIENTLY.

COOLING MODE:
1. UPON A CALL FOR COOLING FROM THE SPACE TEMPERATURE THERMOSTAT, BOTH OUTDOOR AND INDOOR UNITS SHALL ENERGIZE AND OPERATE THROUGH THE STAGES OF COOLING TO MAINTAIN THE SPACE TEMPERATURE SETPOINT OF 75°F (ADJ.).
2. THE UNIT SHALL MODULATE PER FACTORY SETTINGS TO MAINTAIN SETPOINT EFFICIENTLY.

DEHUMIDIFICATION MODE:
1. DEHUMIDIFICATION MODE SHALL BE ENABLED WHEN SPACE RELATIVE HUMIDITY EXCEEDS 60% (ADJ.).
2. UPON A CALL FOR DEHUMIDIFICATION THE INDOOR UNIT FAN SPEED SHALL REDUCE TO LOW SPEED TO INCREASE LATENT HEAT REMOVAL.
3. THE SYSTEM SHALL MODULATE REFRIGERANT FLOW TO MAINTAIN A EVAPORATOR COIL TEMPERATURE 40°F(ADJ.).
4. SPACE TEMPERATURE SHALL BE ALLOWED TO DRIFT DOWN TO A MINIMUM OF 72°F (ADJ.).
5. ONCE SPACE DROPS BELOW 55% RH (ADJ.) THE SYSTEM SHALL RETURN TO NORMAL COOLING MODE.

UNOCCUPIED HOURS:
THE UNIT SHALL DE-ENERGIZE.

HEATING MODE:
1. UPON A CALL FOR HEAT FROM THE SPACE TEMPERATURE SENSOR, THE UNIT SHALL BE ENERGIZED AND MAINTAIN THE UNOCCUPIED SPACE TEMPERATURE SETPOINT OF 55°F(ADJ.).

COOLING MODE:
1. COOLING SHALL BE LOCKED OUT DURING UNOCCUPIED HOURS.

ALARMS:
FREEZE PROTECTION:
1. UPON THE DETECTION OF LOW AMBIENT OR SPACE TEMPERATURE BELOW 45°F (ADJ.) THE SYSTEM SHALL ENERGIZE IN HEATING MODE REGARDLESS OF OCCUPANCY STATUS. INDOOR UNITS SHALL OPERATE TO PREVENT FREEZING PIPING AND EQUIPMENT.

REFRIGERANT LEAK DETECTION:
1. IF A REFRIGERANT LEAK IS DETECTED THE COMPRESSOR SHALL DE-ENERGIZE
2. THE REFRIGERANT SHALL ALL BE PUMPED TO THE CONDENSER.
3. ALARM SHALL ANNUNCIATE AT THE BMS.

2 VRF SEQUENCE OF OPERATION
N.T.S

100% DESIGN DOCUMENTS

No.	DATE	DESCRIPTION	DESIGNER	REVIEWER

STATE OF CONNECTICUT
JENNIFER L. TIMMERMAN
REG. NO. PEN.0032758
LICENSED
PROFESSIONAL ENGINEER

SCALE: 1/4" = 1'-0"
HORZ.:
VERT.:
DATUM:
HORZ.:
VERT.:
GRAPHIC SCALE
0" 2" 3"
4" 1"

FUSS & O'NEILL
One Financial Plaza, 15th Floor
Hartford, Connecticut 06103
860.646.2469
www.fando.com

OLD SAYBROOK PUBLIC SCHOOLS
MECHANICAL SEQUENCE OF OPERATION
80 BOSTON POST ROAD, OLD SAYBROOK, CT 06475

PROJ. No.: 20210255.A44
DATE: 4/3/2026

M-503

C:\Users\jboudreau\OneDrive - DRMP, Inc\Documents\20210255.A44 - OSES HVAC DESIGN_M - R25_jboudreau062.rvt

ROOFTOP UNIT SCHEDULE

TAG No.	MANUFACUTURER (AS STANDARD)	MODEL NO. (AS STANDARD)	LOCATION SERVED	TYPE	SOUND DATA (dBA)	FAN DATA				COOLING CAPACITY			HEAT PUMP HEATING CAPACITY DATA				GAS HEATING CAPACITY DATA				ELECTRIAL					WEIGHT (LBS)
						DESIGN AIRFLOW (CFM)	MAX. OA (CFM)	ESP (in WC)	MOTOR H.P.	EAT DB/WB °F	SENSIBLE CAPACTIY (MBH)	TOTAL CAPACITY (MBH)	CAPACITY (MBH)	EAT (°F)	TEMP RISE (°F)	COP	GAS INPUT (MBH)	GAS OUTPUT (MBH)	TEMP RISE (°F)	BURNER EFFICENCY (%)	VOLTS	PHASE	HZ	MCA	MOP	
RTU-1	CAPTIVE AIRE	CAS - HVAC3-I.400-18-20T	GYMNASIUM	HEAT PUMP / NATURAL GAS	70.9	3200	3200	0.50	2.00	82 / 72	113.9	223.9	73.4	10.0	19.0	3.4	400.0	324	83	81	208.0	3.0	60.0	101.9A	110A	2909.0

NOTES:
1. FURNISH WITH PLENUM CURB AND VIBRATION ISOLATION
2. PROVIDE SINGLE POINT ELECTRICAL CONNECTION AND CONVENIENCE OUTLET. DISCONNECT FURNISHED BY MECHANICAL CONTRACTOR INSTALLED BY ELECTRICAL CONTRACTOR
3. PROVIDE WITH CASLINK BACNET INTERFACE, INTEGRATE INTO EXISTING BMS
4. PROVIDE WITH CONDENSER HAIL GUARD, COMPRESSOR SOUND BLANKET
5. PROVIDE EXONOMIZER WITH DIFFERENTIAL ENTHALPY CONTROL
6. PROVIDE 1" GAS STRAINER, SMOKE DETECTOR/ALARM INTERLOCK. ECM WIRING PACKAGE, 5 YEAR PARTS WARRANTY WITH REMOTE MONITORING AND SERVICE CONTRACT

VRF AIR COOLED OUTDOOR UNIT SCHEDULE

TAG	MFR.	MODEL	SERVICE	LOCATION	COOLING CAPACITY (BTU/h)	HEATING CAPACITY (BTU/h)	REFRIGERANT		COOLING EFFICIENCY (SEER)	ELECTRICAL					WEIGHT (lbs)
							TYPE	CHARGE (lbs)		V	PH	Hz	MCA	MOCP	
HP-1	MITSUBISHI	MXZ-SM48NLHZ	CLASSROOMS & GYM OFFICE	ROOF	48,000	54,000	R454B	22	23	208/ 230	1	60	45	80	283
HP-2	MITSUBISHI	MXZ-SM60NL	CONFERENCE ROOMS & CORRIDOR	ROOF	60,000	66,000	R454B	17	23	208/ 230	1	60	45	80	283
HP-3	MITSUBISHI	PUHY-EM144TXU-A	CAFETERIA	ROOF	144,000	160,000	R32	32	23	208/ 230	3	60	60	100	680

NOTES
1. DISCONNECTS TO BE FURNISHED BY MECHAINCAL CONTRACTOR AND INSTALLED BY ELECTRICAL CONTRACTOR.
2. ADDITIONAL REFRIGERANT CHARGE MAY BE NEEDED. REFER TO MANUFACTURERS INSTRUCTIONS FOR MAX PIPE LENGTH AND ADDITIONAL CHARGE REQUIREMENTS.
3. INSTALL ACCORDING TO MANUFACTURERS INSTRUCTIONS. PROVIDE EQUIPMENT STAND AND SUPPORT AS NEEDED.
4. PROVIDE BACNET CONNECTION INTERFACE.

VRF FAN COIL UNIT SCHEDULE

TAG	MFR.	MODEL	SERVICE	TYPE	REF. TYPE	CFM	COOLING					HEATING			ELECTRIC				
							CAPACITY (MBH)		EAT (°F)		LAT (°F)	CAPACITY (BTU/h)	EAT (°F)	LAT (°F)	V	PH	HZ	MCA	MOCP
							TOTAL	SENSIBLE	DB	WB									
FCU-1	MITSUBISHI	PLFY-EL24NEMU-A	CLASSROOM 4	CEILING CASSETTE (FOUR-WAY)	R454B	636-812	21.2	15.7	80	67	61.7	23,447.2	70	96.8	208/230	1	60	0.54	15
FCU-2	MITSUBISHI	PLFY-EL24NEMU-A	CLASSROOM 5	CEILING CASSETTE (FOUR-WAY)	R454B	636-813	21.2	15.7	80	67	61.7	23,447.2	70	96.8	208/230	1	60	0.54	15
FCU-3	MITSUBISHI	PKFY-L04NLMU-A	GYM OFFICE	WALL-MOUNTED	R454B	117-148	3.5	2.7	80	67	62.7	3,907.9	70	94.5	208/230	1	60	0.24	15
FCU-4	MITSUBISHI	PEFY-L12NMAU-A	CONFERENCE ROOM 1	WALL-MOUNTED	R454B	265 -371	12.0	8.4	80	67	58.7	13,462.4	70	103.6	208/230	1	60	1.88	15
FCU-5	MITSUBISHI	PEFY-L12NMAU-A	CONFERENCE ROOM 2	WALL-MOUNTED	R454B	266 -371	12.0	8.4	80	67	58.7	13,462.4	70	103.6	208/230	1	60	1.88	15
FCU-6,7	MITSUBISHI	PFKY-L18NLMU-A	CORRIDOR	WALL-MOUNTED	R454B	240-438	18.0	12.6	80	67	58.7	20,000.0	70	103.6	208/230	1	60	0.24	15
FCU-8-13	MITSUBISHI	PLFY-EM24NEMU-A	CAFETERIA	CEILING CASSETTE (FOUR-WAY)	R-32	636-812	24.0	19.9	81	68	56.8	27,000.0	68	89.5	208/230	1	60	0.54	15

NOTES
1. PROVIDE BLUE DIAMOND MAXIBLUE ADVANCED MINI CONDENSATE PUMP W/ RESERVOIR FOR WALL MOUNTED FCUS.
2. PROVIDE PAC-SDW01RC-1 SIMPLE DIRECT WIRED REMOTE CONTROLLER AND PAC-UKPRC001-CN-1 BACNET INTERFACE CONTROLS.

GRILLE AND DIFFUSER SCHEDULE

UNIT	DESCRIPTION	CONSTRUCTION	MFGR	MODEL	FLOW RANGE		NOMINAL SIZE (IN)	NECK DIAMETER (IN)	PERFORMANCE		MOUNTING SELECTION
					MIN CFM	MAX CFM			MAX NC	MAX NECK VEL (FPM)	
A1	SUPPLY SPIRAL DUCT REGISTER	ALUMINUM	PRICE	SDG	354	708	24 X 8	-	19	600	ON DUCT
B1	RETURN GRILLE	ALUMINUM	PRICE	99	1250	6250	30 X 30	-	25	500	FACE HOSTED

NOTES:
1. PROVIDE AIR FLOW (CFM) AND FLOW PATTERN AS SHOWN ON DRAWINGS.
2. SUPPLY SPIRAL DUCT-MOUNTED DESIGN BASED ON 22° DIFFUSER MOUNT.
3. INCLUDE OPPOSED BLADE DAMPER ON ALL DUCT MOUNTED REGISTERS.

CONDENSATE PUMP SCHEDULE

TAG	MFR	MODEL	GPH @ 5' HEAD	TANK CAPACITY (GAL)	SHUT-OFF (FT)	ELECTRICAL			DISCHARGE DIAMETER (in)	NOTES
						HP	V/Hz	FLA		
CP-1	BLUE DIAMOND	MAXIBLUE X87-721	3.7	0.027	23	1/25	110-240/60	0.06	1/4	1

NOTES:
1. PROVIDE FOR FCU 3, 6, AND 7

100% DESIGN DOCUMENTS

REVIEWER | DESIGNER | DESCRIPTION | DATE | No.

STATE OF CONNECTICUT
JENNIFER L. TUTTLE
NO. PEN.0032758
LICENSED
PROFESSIONAL ENGINEER

SCALE: HORZ.: NTS VERT.:
DATUM: HORZ.: VERT.:
GRAPHIC SCALE

FUSS & O'NEILL
One Financial Plaza, 15th Floor
Hartford, Connecticut 06103
860.646.2469
www.fando.com

OLD SAYBROOK PUBLIC SCHOOLS
MECHANICAL SCHEDULES
80 BOSTON POST ROAD, OLD SAYBROOK, CT 06475

PROJ. No.: 20210255.A44
DATE: 4/3/2026

M-601

C:\Users\jboudreau\OneDrive - DRMP, Inc\Documents\20210255.A44 - OSES HVAC DESIGN_M - R25_jboudreau062.rvt

ELELCTRICAL LEGEND

* MOUNTING HEIGHTS SHALL BE AS INDICATED UNLESS SHOWN OTHERWISE ON ELECTRICAL DRAWINGS OR ARCHITECTURAL ELEVATIONS
* ALL SYMBOLS MAY NOT BE SHOWN ON PLANS

RACEWAYS AND WIRING

PB-2	HOMERUN TO PANELBOARD. "PB" DENOTES PANEL, "2" DENOTES CIRCUIT NUMBER, REFER TO PANELBOARD SCHEDULE FOR CIRCUIT SIZE AND BRANCH CIRCUIT SCHEDULE FOR FEEDER REQUIREMENTS
E	2#10,#10G EMERGENCY ONLY WIRING
CT	CABLE TRAY - REFER TO SPECIFICATIONS FOR REQUIREMENTS
J	J HOOKS 3'-0" ON CENTER
P	PRIMARY CONDUIT DUCT BANK
S	SECONDARY CONDUIT DUCT BANK
	CONDUIT TURNING UP
	CONDUIT TURNING DOWN
	CONDUIT SLEEVE
	CONDUIT STUB
D	COMMUNICATIONS CONDUIT DUCT BANK

RECEPTACLES

(MOUNTED 18" AFF OR AS INDICATED ON ARCHITECTURAL PLANS)

2	DUPLEX RECEPTACLE "2" = CIRCUIT NUMBER, "IG" = ISOLATED GROUND TYPE DEVICE "WP" = WEATHERPROOF IN-USE COVER OR DUST TIGHT WHEN USED INDOORS OR OUTDOORS
	DUPLEX RECEPTACLE MOUNTED 6" ABOVE COUNTER TOP OR AS INDICATED ON ARCHITECTURAL PLANS
	DOUBLE DUPLEX RECEPTACLE MOUNTED 6" ABOVE COUNTER TOP OR AS INDICATED ON THE ARCHITECTURAL PLANS
	DOUBLE DUPLEX RECEPTACLE
	DUPLEX RECEPTACLE COORDINATE MOUNTING HEIGHT WITH ARCHITECT
	SINGLE YOKE SWITCHED RECEPTACLE CONNECTED TO LIGHTING CONTROL SYSTEM, COORDINATE EXACT MOUNTING HEIGHT AND LOCATION WITH ARCHITECT PRIOR TO INSTALLATION
	DUPLEX GROUND FAULT CIRCUIT INTERRUPTING RECEPTACLE
	DUPLEX GROUND FAULT CIRCUIT INTERRUPTING RECEPTACLE MOUNTED 6" ABOVE COUNTER TOP OR AS INDICATED ON ARCHITECTURAL PLANS
	USB DUPLEX GROUND FAULT CIRCUIT INTERRUPTING RECEPTACLE OUTLET
	DUPLEX RECEPTACLE, CEILING MOUNTED
	DUPLEX RECEPTACLE, CEILING MOUNTED, REFER TO CORD DROP DETAIL
	SERVICE DUPLEX RECEPTACLE LIGHTING
#	SPECIAL PURPOSE RECEPTACLE, REFER TO SPECIAL PURPOSE RECEPTACLE SCHEDULE, "#" INDICATES TYPE

POWER DISTRIBUTION EQUIPMENT

	120/208V PANEL, SURFACE MOUNTED
	120/208V PANEL, RECESSED MOUNTED
	277/480V PANEL, SURFACE MOUNTED
	277/480V PANEL, RECESSED MOUNTED
	TELEPHONE TERMINAL BACKBOARD, 4'x8' 3/4" PLYWOOD
J	JUNCTION BOX, SIZED PER NEC
2	MOTOR, "2" DENOTES HORSEPOWER
	MAGNETIC MOTOR STARTER WITH ENCLOSURE, MINIMUM SIZE NEMA 1
	MANUAL MOTOR STARTER WITH THERMAL OVERLOAD.
30A	NON-FUSED 3 POLE DISCONNECT SWITCH: "30A" DENOTES 30 AMP SWITCH
30AF 30AT	FUSED 3 POLE DISCONNECT SWITCH: "30AF" DENOTES 30 AMP FRAME SIZE, "30AT" DENOTES 30 AMP TRIP SETTING
30AF 30AT	COMBINATION MAGNETIC STARTER AND FUSED 3 POLE DISCONNECT SWITCH: "30AF" DENOTES 30 AMP FRAME SIZE, "30AT" DENOTES 30 AMP TRIP SETTING
T	DRT-TYPE TRANSFORMER. REFER TO DRAWING NOTES AND/OR ELECTRICAL RISER DIAGRAM FOR SIZES
ATS	AUTOMATIC TRANSFER SWITCH
TVSS	TRANSIENT VOLTAGE SURGE SUPPRESSION
VFD	VARIABLE FREQUENCY DRIVE
	GROUNDING - REFER GROUNDING DETAIL AND SINGLE-LINE DIAGRAM FOR SIZES.
	AUTOMATIC TRANSFER SWITCH
	CIRCUIT BREAKER
	ENCLOSED CIRCUIT BREAKER
M	UTILITY METER

MISCELLANEOUS

1 1	KEYED DRAWING NOTE MARKER
400/4	FEEDER SIZE - REFER TO THREE PASE CIRCUIT SCHEDULE ON DRAWING E-600
J	JUNCTION BOX WITH FLEXIBLE CONNECTION TO EQUIPMENT
CP	CONTROL PANEL
PB	PULL BOX - SIZED PER NEC FOR CONDUITS ENTERING AND LEAVING
KP	KEY PAD
	EMERGENCY POWER OFF PUSH BUTTON SWITCH

MECHANICAL EQUIPMENT

RTU 1	(MECHANICAL EQUIPMENT FURNISHED AND INSTALLED BY MECHANICAL CONTRACTOR)
ACC	AIR-COOLED CONDENSER
AHU	AIR HANDLING UNIT
B	BOILER
DU	DEHUMIDIFICATION UNIT
EF	EXHAUST FAN
EH	EXHAUST HOOD
EWH	ELECTRIC WALL HEATER
FC	FAN COIL
HP	HEAT PUMP
MAU	MAKE-UP AIR UNIT
M	MOTORIZED DAMPER
P	PUMP
RTU	ROOF TOP UNIT
UH	UNIT HEATER
VAV	VARIABLE AIR VOLUME BOX

BRANCH CIRCUIT AND FEEDER SYMBOLS

P1-2	HOME RUN TO PANELBOARD "P1", CIRCUIT NUMBER "2", REFER TO PANEL SCHEDULES FOR BREAKER SIZE AND NUMBER OF POLES CONCEALED UNLESS OTHERWISE NOTED
P1-2,4,6	NUMBER OF ARROWS INDICATES NUMBER OF HOME RUNS "2", "4", AND "6" UNLESS NOTED OTHERWISE, WIRING FOR EACH CIRCUIT SHALL BE: 20A/1P - 2#12, #12G-3/4"C 20A/2P - 3#12, #12G-3/4"C 20A/3P - 4#12, #12G-3/4"C WIRING FOR MULTIPLE HOME RUNS MAY BE COMBINED IN CONDUIT IN ACCORDANCE WITH NEC REQUIREMENTS
4#1,#6G.-1-1/2"C	HOMERUN FEEDER / BRANCH CIRCUIT CALLOUT; INDICATES (3) #1 AWG (PHASE), (1) AWG (NEUTRAL), (1) #6 GROUND IN A 1-1/2" CONDUIT
	FLEXIBLE CONNECTION TO MOTOR OR EQUIPMENT

ABBREVIATIONS

3R	NEMA 3R RATING
4X	NEMA 4X RATING
A	AMPERES
AFF	ABOVE FINISHED FLOOR
AFG	ABOVE FINISHED GRADE
AIC	AMPERE INTERRUPTING CAPACITY
ARCH	ARCHITECT
AWG	AMERICAN WIRE GAUGE
C	CONDUIT
C/B	CIRCUIT BREAKER
C.T.	CURRENT TRANSFORMER
CAT	CATALOG
CKT	CIRCUIT
CU	COPPER
DWG	DRAWING
E	WIRED ON EMERGENCY CIRCUIT
EBB	ELECTRIC BASEBOARD
EC	ELECTRICAL CONTRACTOR
EM	EMERGENCY
G	GROUND
GC	GENERAL CONTRACTOR
GFI	GROUND FAULT INTERRUPTER
IG	ISOLATED GROUND
KCMIL	ONE THOUSAND CIRCULAR MILS
KVA	KILOVOLT-AMPERES
KW	KILOWATTS
MCB	MAIN CIRCUIT BREAKER
NC	NORMALLY CLOSED
NEC	NATIONAL ELECTRICAL CODE
NO	NORMALLY OPEN
NTS	NOT TO SCALE
Ø	PHASE
P	POLE
PC	PLUMBING CONTRACTOR
P.T.	POTENTIAL TRANSFORMER
PVC	POLYVINYL CHLORIDE
SM	SURFACE MOUNT
T/D	TEL/DATA
TEL	TELEPHONE
UG	UNDERGROUND
UNO	UNLESS NOTED OTHERWISE
V	VOLT
VIF	VERIFY IN FIELD
W	WATT
WP	WEATHERPROOF

EXISTING EQUIPMENT DESIGNATIONS

X	EXISTING TO BE REMOVED, REMOVE ALL ASSOCIATED CONDUIT AND CONDUCTORS
XM	EXISTING TO REMAIN
XN	EXISTING EQUIPMENT TO BE REPLACED WITH NEW, CONNECT TO EXISTING EQUIPMENT CIRCUIT
XR	EXISTING EQUIPMENT TO BE RELOCATED, JUNCTION AND EXTEND EXISTING CONDUIT AND CONDUCTORS
XC	NEW EQUIPMENT TO BE CONNECTED TO NEAREST AVAILABLE BRANCH CIRCUIT, PROVIDE NEW BRANCH CIRCUITRY FROM NEAREST EXISTING DEVICE (TO REMAIN) TO NEW DEVICE AS REQUIRED
XL	NEW LOCATION OF EXISTING EQUIPMENT, JUNCTION AND EXTEND CONDUIT AND CONDUCTORS AS REQUIRED

ELECTRICAL GENERAL NOTES:

1. ALL ELECTRICAL WORK SHALL BE INSTALLED IN ACCORDANCE WITH THE DRAWINGS AND THE LATEST ADOPTED EDITION OF THE NATIONAL ELECTRICAL CODE AND ALL STATE AND LOCAL CODES AND AMENDMENTS.
2. THE CONTRACTOR SHALL OBTAIN AND BEAR THE COST OF ALL PERMITS REQUIRED TO PERFORM THE WORK.
3. ELECTRICAL DRAWINGS ARE DIAGRAMMATIC (EXCEPT WHERE DIMENSIONED) AND INDICATE THE GENERAL ARRANGEMENT OF SYSTEM AND WORK. ALL LOCATIONS AND CONDUIT SIZING SHOWN ARE APPROXIMATE ONLY. CONTRACTOR SHALL VERIFY FIELD CONDITIONS FOR OPTIMUM ROUTING AND SIZING OF CONDUITS.
4. EXACT LOCATION OF ALL EQUIPMENT, PANELS, PULL BOXES, FEEDERS, FIXTURES, ETC., SHALL BE APPROVED BY THE ENGINEER, ARCHITECT, AND OWNER PRIOR TO THE INSTALLATION OF THE SAME.
5. CONTRACTOR SHALL COORDINATE WITH OTHER TRADES TO ELIMINATE ANY INTERFERENCE WITH PIPES, DUCTS, ETC.
6. FOR EXACT LOCATIONS OF MECHANICAL EQUIPMENT, REFER TO MECHANICAL DRAWINGS.
7. CONTRACTOR SHALL FURNISH ALL NECESSARY OUTLETS, SUPPORTS, FITTINGS, JUNCTION BOXES AND ACCESSORIES TO FULFILL APPLICABLE CODES, REGULATIONS, AND THE BEST PRACTICES OF THE TRADE FOR INSTALLATION OF ALL ELECTRICAL WORK TO COMPRISE A COMPLETE AND OPERATING SYSTEM WHETHER SHOWN ON THE PLANS OR NOT.
8. CONDUITS AND WIRING SHALL BE INSTALLED CONCEALED WHEREVER POSSIBLE AND SHALL BE INSTALLED PARALLEL OR PERPENDICULAR TO ALL BUILDING LINES.
9. ALL CONDUITS SHALL CONTAIN A GREEN GROUND WIRE. BOND ALL PANELS, CABINETS, ENCLOSURES, CONDUITS, ETC., AS REQUIRED. ALL GROUNDING CONDUCTORS SHALL BE CONTINUOUS TO MAIN GROUNDING SYSTEM.
10. ALL WIRE SHALL BE 600V INSULATED TYPES THWN OR XHHW, 75°C, COPPER, UNLESS OTHERWISE INDICATED.
11. BRANCH CIRCUIT WIRING SHALL BE MINIMUM 2#12, 1#12G, 3/4"C. BRANCH CIRCUIT WIRING AND HOMERUNS WITH LENGTHS EXCEEDING 90 FEET FOR 120V AND 200 FEET FOR 277V SHALL USE #10 AWG, THOSE EXCEEDING 140 FEET FOR 120V SHALL USE #8 AWG CONDUCTORS.
12. ALL CUTTING, PATCHING AND FIRESTOPPING RELATED TO ELECTRICAL WORK SHALL BE THE RESPONSIBILITY OF THE GENERAL CONTRACTOR.
13. PROVIDE CONDUIT SLEEVES FILLED WITH AN APPROVED FIRE-RESISTANT MATERIAL TO MAINTAIN RATING WHERE FIRE-RATED WALLS, FLOORS OR CEILINGS ARE PENETRATED.
14. FOR EXACT LOCATIONS AND MOUNTING HEIGHTS OF DEVICES AND EQUIPMENT, REFER TO ARCHITECTURAL DRAWINGS. COLORS AND FINISHES OF DEVICES, COVER PLATES, LIGHTING FIXTURES, ETC., SHALL BE APPROVED BY THE ARCHITECT DURING THE SHOP DRAWING PHASE OF CONSTRUCTION.
15. COORDINATE LOCATIONS AND MOUNTING HEIGHTS OF LIGHT FIXTURES WITH THE ARCHITECTURAL FLOOR PLANS, ELEVATIONS AND REFLECTED CEILING PLANS. ANY DISCREPANCIES SHALL BE BROUGHT TO THE ATTENTION OF THE ARCHITECT/ENGINEER FOR FINAL DISPOSITION.
16. INSTALL ALL EQUIPMENT IN ACCESSIBLE LOCATIONS. WHERE EQUIPMENT MUST BE INSTALLED ABOVE AN INACCESSIBLE CEILING OR BEHIND A WALL, AN APPROPRIATE ACCESS DOOR SHALL BE PROVIDED AND THE LOCATION SHALL BE COORDINATED WITH THE ARCHITECT.
17. ALL CONDUIT AND FLEXIBLE CONDUITS THAT ARE EXPOSED TO WATER, SPLASHING, OR WEATHER SHALL BE LIQUIDTIGHT.
18. IN DAMP OR WET LOCATIONS, BOXES, CONDUIT BODIES, OUTLET BOX HOODS, AND FITTINGS SHALL BE PLACED OR EQUIPPED SO AS TO PREVENT MOISTURE FROM ENTERING OR ACCUMULATING WITHIN THE BOX, CONDUIT BODY, OR FITTING. BOXES, CONDUIT BODIES, OUTLET BOX HOODS, AND FITTINGS INSTALLED IN WET LOCATIONS SHALL BE LISTED FOR USE IN WET LOCATIONS. APPROVED DRAINAGE OPENINGS NOT SMALLER THAN 3 MM (1/8 IN.) AND NOT LARGER THAN 6 MM (1/4 IN.) IN DIAMETER SHALL BE PERMITTED TO BE INSTALLED IN THE FIELD IN BOXES OR CONDUIT BODIES LISTED FOR USE IN DAMP OR WET LOCATIONS. FOR INSTALLATION OF LISTED DRAIN FITTINGS, LARGER OPENINGS ARE PERMITTED TO BE INSTALLED IN THE FIELD IN ACCORDANCE WITH MANUFACTURER'S INSTRUCTIONS.

ELECTRICAL DEMOLITION NOTES:

1. DISCONNECT AND MAKE SAFE ALL ELECTRICAL EQUIPMENT IDENTIFIED FOR REMOVAL ON THE MECHANICAL AND PLUMBING PLANS. THE ELECTRICAL SCOPE MAY EXTEND BEYOND THE AREA DEFINED BY THE DEMOLITION LIMITS TO FULLY COMPLY WITH VARIOUS REQUIREMENTS DEFINED BY THESE NOTES.
2. THE ELECTRICAL DEMOLITION PLANS AND DETAILS INDICATE THE GENERAL INTENT AND ARE NOT INTENDED TO SHOW ALL ITEMS TO BE REMOVED OR RETAINED. THE ELECTRICAL CONTRACTOR SHALL VISIT THE SITE PRIOR TO THE SUBMISSION OF BIDS TO BECOME FAMILIAR WITH THE ACTUAL CONDITIONS AND EXTENT OF WORK. DEVICES AND EQUIPMENT LOCATED ON WALLS AND/OR CEILINGS TO BE REMOVED SHALL BE DISCONNECTED AND MADE SAFE. THE ELECTRICAL CONTRACTOR SHALL NOTIFY THE OWNER'S REPRESENTATIVE OF ANY UNANTICIPATED HIDDEN CONDITIONS ENCOUNTERED DURING DEMOTION.
3. ELECTRICAL CONTRACTOR SHALL CIRCUIT TRACE AND LABEL ALL EXISTING BRANCH CIRCUITS AND FEEDERS WITHIN THE AREA OF DEMOLITION SCOPE PRIOR TO DE-ENERGIZING AND DISCONNECTION.
4. THE ELECTRICAL CONTRACTOR SHALL IDENTIFY ALL BRANCH CIRCUITS, FEEDERS AND SYSTEM COMPONENTS, WHICH ARE TO REMAIN WITHIN THE AREA OF DEMOLITION SCOPE. THERE SHALL BE NO INTERRUPTION OF SERVICE TO ANY AREA OUTSIDE THE SCOPE LIMITS WITHOUT APPROVAL FROM THE OWNER'S REPRESENTATIVE. EXISTING EQUIPMENT TO REMAIN SHALL BE LEFT IN A CODE COMPLIANT MANNER.
5. THE ELECTRICAL CONTRACTOR SHALL DE-ENERGIZE AND REMOVE ALL CONDUCTORS AND RACEWAYS TO THEIR POINT OF ORIGIN WITHIN THE AREA OF DEMOLITION SCOPE. ITEMS IDENTIFIED FOR DEMOLITION SHALL NOT BE ABANDONED IN PLACE. RACEWAYS THAT ENTER MASONRY WALLS AND FLOORS SHALL BE CUT FLUSH AT THE THE SURFACE FOR PATCHING BY OTHERS. ALL CIRCUIT BREAKERS ASSOCIATED WITH THE DEMOLITION SCOPE SHALL BE DE-ENERGIZED AND LABELED SPARE.
6. ALL REMOVED ITEMS SHALL BE LEGALLY DISPOSED OF UNLESS IDENTIFIED FOR REUSE. THE OWNER'S REPRESENTATIVE SHALL INSPECT ALL RETAINED ITEMS PRIOR TO PLACEMENT IN THE IDENTIFIED STORAGE LOCATION BY THE ELECTRICAL CONTRACTOR.

No.	DATE	DESCRIPTION	DESIGNER	REVIEWER

STATE OF CONNECTICUT
KEVIN M. SULLIVAN
No. 25869
LICENSED
PROFESSIONAL ENGINEER

SCALE: HORZ.: VERT.:
DATUM: HORZ.: VERT.:
GRAPHIC SCALE

FUSS & O'NEILL
146 Hartford Road
Manchester, Connecticut 06040
860.646.2469
www.fando.com

OLD SAYBROOK PUBLIC SCHOOLS
ELECTRICAL LEGEND AND GENERAL NOTES
KATHLEEN E. GOODWIN ELEMENTARY SCHOOL
HVAC UPGRADES

PROJ. No.: 20210255.A44
DATE: 04/03/2026

E-001

C:\Users\Dinesh.patel\Documents\Old Saybrook - Electrical - CENTRAL- R25 - new_Dinesh.PatelQPYUA.rvt

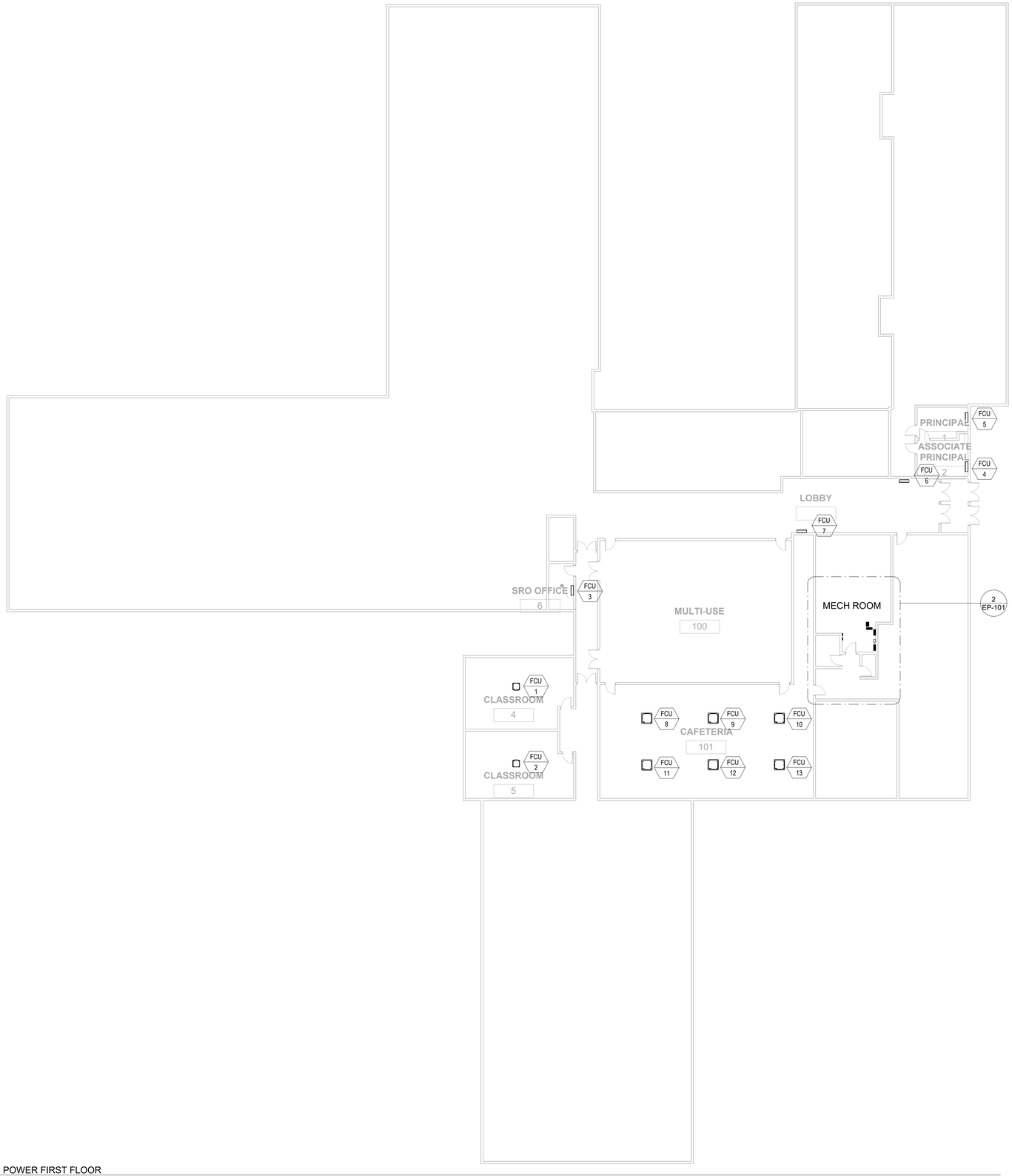

1 POWER FIRST FLOOR
1/16" = 1'-0"

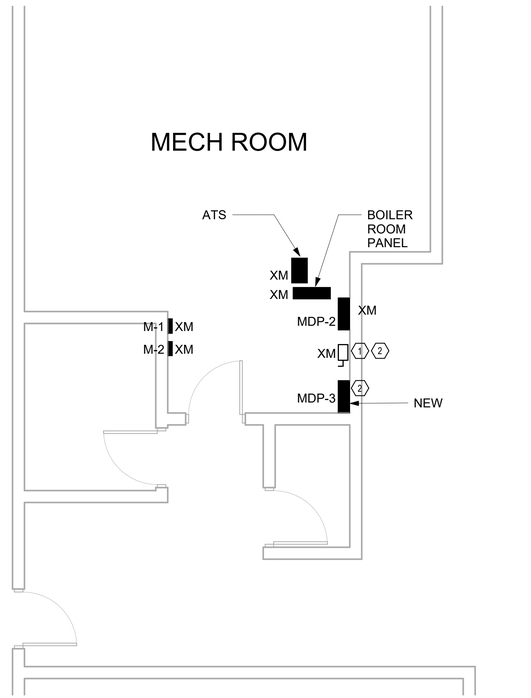

2 MECH ROOM
1/4" = 1'-0"

1 EXISTING 800A CIRCUIT BREAKER REMAIN IN PLACE

2 THE ELECTRICAL CONTRACTOR SHALL RECONNECT EXISTING BREAKER TO NEW PANEL MDP-3, UTILIZING LUGS IN NEW PANEL MDP-3

No.	DATE	DESCRIPTION	DESIGNER	REVIEWER

STATE OF CONNECTICUT
KEVIN M. SULLIVAN
No. 26660
LICENSED
PROFESSIONAL ENGINEER

SCALE:
HORZ.:
VERT.:
DATUM:
HORZ.:
VERT.:
GRAPHIC SCALE

FUSS & O'NEILL
146 Hartford Road
Manchester, Connecticut 06040
860.646.2469
www.fando.com

OLD SAYBROOK PUBLIC SCHOOLS
ELECTRICAL POWER FIRST FLOOR PLAN
KATHLEEN E. GOODWIN ELEMENTARY SCHOOL
HVAC UPGRADES

PROJ. No.: 20210255.A44
DATE: 04/03/2026

EP-101

C:\Users\Dinesh.patel\Documents\Old Saybrook - Electrical - CENTRAL- R25 - new_Dinesh.PatelQPYUA.rvt

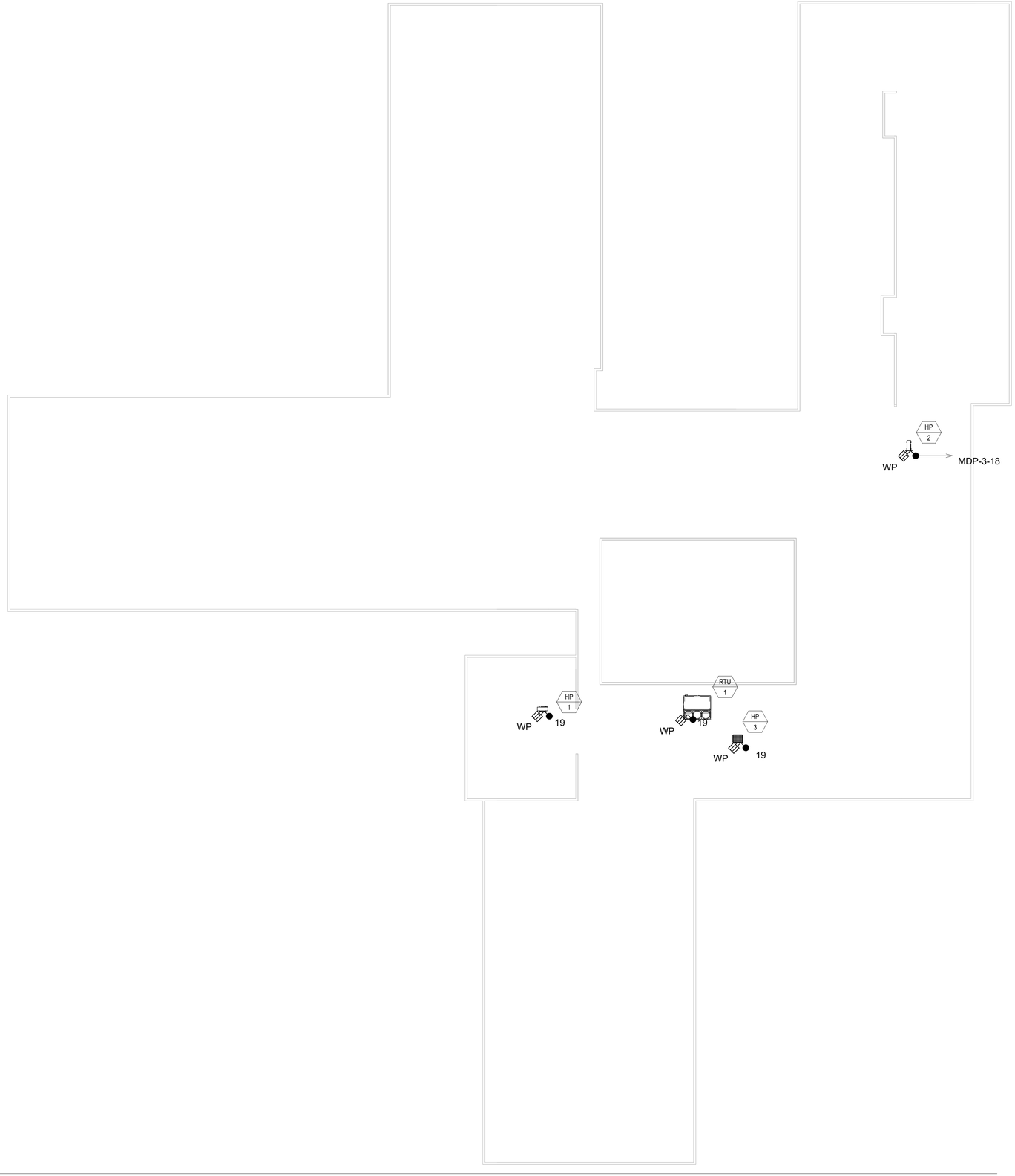

1 POWER ROOF PLAN
1/16" = 1'-0"

NOTES:

1. ALL CONDUITS ON ROOF SHALL BE GALVANIZED STEEL. THE LAST 18"-30" OF THE CONDUITS RUN TO EACH MOTOR SHALL BE LIQUID TIGHT FLEXIBLE METALLIC CONDUIT.
2. ALL SUPPORT (ELECTRICAL) EQUIPMENT AND RECEPTACLES SHALL BE BY E.C. UNISTRUT SHALL BE FIBERGLASS OR GALVANIZED RIGID STEEL. ALL HARDWARE SHALL BE STAINLESS STEEL
3. E.C. UTILIZE ROOF CURBS FOR ALL ROOF PENETRATIONS. ROOF IS EXISTING

No.	DATE	DESCRIPTION	DESIGNER	REVIEWER

STATE OF CONNECTICUT
KEVIN M. SULLIVAN
No. 26650
LICENSED
PROFESSIONAL ENGINEER

SCALE:
HORZ.:
VERT.:
DATUM:
HORZ.:
VERT.:
GRAPHIC SCALE

FUSS & O'NEILL
146 Hartford Road
Manchester, Connecticut 06040
860.646.2469
www.fando.com

OLD SAYBROOK PUBLIC SCHOOLS
ELECTRICAL POWER ROOF PLAN
KATHLEEN E. GOODWIN ELEMENTARY SCHOOL
HVAC UPGRADES

PROJ. No.: 20210255.A44
DATE: 04/03/2026

EP-102

C:\Users\Dinesh.patel\Documents\Old Saybrook - Electrical - CENTRAL- R25 - new_Dinesh.PatelQPYUA.rvt

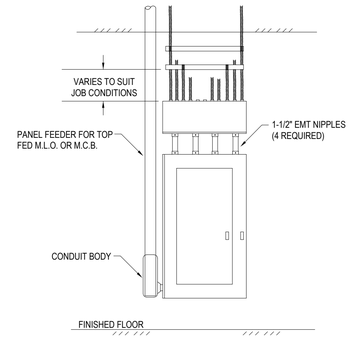

FRONT ELEVATION

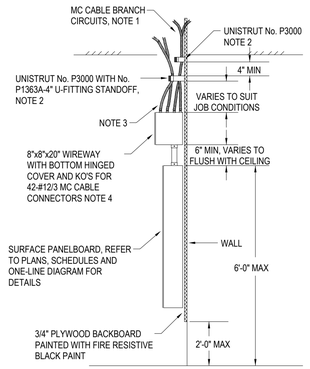

SIDE ELEVATION

NOTES:

1. SUPPORT ALL CABLE RUNS FROM BUILDING STRUCTURE TO HIGH ABOVE CEILING. DO NOT ALLOW CABLES TO LAY-ON HUNG CEILINGS AT ANY POINT IN RUN.
2. PROVIDE UNISTRUT No. M5026 OR No. M5028 CABLE/CONDUIT CLAMPS FOR EACH BRANCH CIRCUIT. INSTALL ALL INSIDE CABLE RUNS ON INSIDE STRUT AND INSIDE WIREWAY KO'S BEFORE INSTALLING ANY RUNS ON OUTSIDE STRUT. SUPPLY AND INSTALL ONE SPARE CLAMP FOR EACH SPARE OR SPACE IN PANELBOARD.
3. INSTALL MARKER TAPE INDICATING CIRCUIT NUMBERS FOR EACH CABLE RUN.
4. CUT BACK CABLE ARMOR JACKET SUFFICIENT TO RUN CONDUCTORS THRU WIREWAY AND NIPPLES TO EACH CIRCUIT BREAKER. WITHOUT SPLICES.
5. CONDUCTORS RUN IN PANELBOARDS, NIPPLES AND WIREWAY SHALL BE GROUPED WITH 3 PHASES AND NEUTRALS IN EACH BUNDLED CONDITION TO AVOID INDUCTIVE HEATING IN METALLIC ENCLOSURES.

TYPICAL SURFACE MOUNTED PANELBOARD / BRANCH CIRCUIT WIRING DETAIL

1 / E501 SCALE: NTS

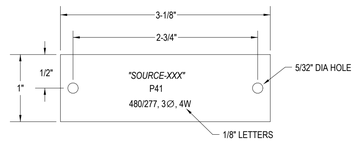

NOTES:

1. NAMEPLATE TO BE CONSTRUCTED OF 1/16" THICK WHITE SURFACE WITH LETTER ENGRAVED INTO BLACK LAMINATIONS.
2. ALL NAMEPLATES SHALL BE SECURED BY MACHINE SCREWS.
3. NO NAMEPLATES SHALL BE PASTED ON.

TYPICAL NAMEPLATE DETAIL

2 / E501 SCALE: NTS

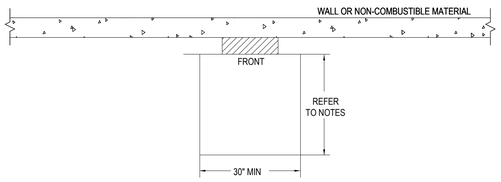

WALL MOUNTED PANELS

*** MINIMUM WORKING CLEARANCE (IN THE DIRECTION OF ACCESS TO LIVE PARTS) AS REQUIRED BY NEC 110-16(a), CONDITION 2 :**

- 3' FOR 0-150 VOLT TO GROUND ELECTRIC EQUIPMENT
- 3-1/2' FOR 150-600 VOLT TO GROUND ELECTRIC EQUIPMENT
THE MINIMUM HEADROOM OF WORKING SPACE SHALL BE 6-1/2'

PANELS INCLUDE: POWER PANELS, CONTACTORS, CONTROL CABINETS, DISCONNECT SWITCHES, CONTROL CABINETS, DISCONNECT SWITCHES, MOTOR STARTERS, TIME CLOCK AND SIMILAR ELECTRIC EQUIPMENT.

CLEARANCES FOR ELECTRIC EQUIPMENT DETAIL

3 / E501 SCALE: NTS

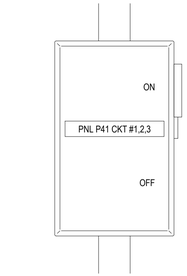

FUSED DISCONNECT SWITCH

NON-FUSED DISCONNECT SWITCH

NOTES:

1. AT A MINIMUM, ELECTRICAL CONTRACTOR SHALL PROVIDE TYPED LABELS WITH PTOUCH MACHINE TO INDICATE PANEL NAME AND CIRCUIT NUMBER. PROVIDE 'EMERGENCY' TYPED LABEL FOR CIRCUITS CONNECTED TO EMERGENCY PANELS. COORDINATE EXACT NAMING WITH PERSONNEL. IF FACILITY STANDARD IS ENGRAVED COVERPLATES, THE ELECTRICAL CONTRACTOR SHALL PROVIDE ENGRAVED COVERPLATES TO MATCH FACILITY REQUIREMENTS.

FUSED DISCONNECT LABELING DETAIL

4 / E501 SCALE: NTS

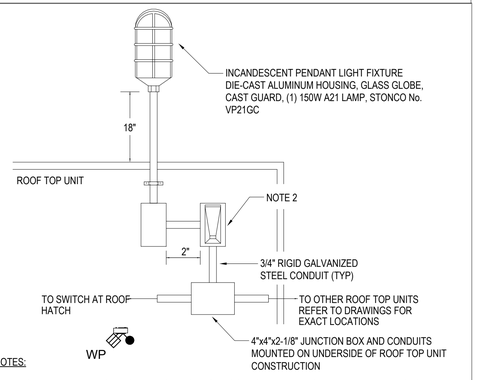

NOTES:

1. MOUNT FIXTURE AT STRUCTURAL SUPPORT OF ROOF TOP UNIT AND SEAL ALL PENETRATIONS THROUGH THE HOUSING.
2. DUPLEX VERTICAL SPRING-LOADED GASKETED SNAP-COVER, STONCO No. FC16, MOUNTED ON A SINGLE GANG BOX, No. FS224, WITH A 20AMP GFI DUPLEX RECEPTACLE, HUBBELL No. GF-5362, MOUNTED ON EXTERIOR OF ROOF TOP UNIT HOUSING. SEAL ALL PENETRATIONS THROUGH THE HOUSING.

ROOF TOP UNIT LIGHT AND RECEPTACLE DETAIL

5 / E-501 SCALE: NTS

No.	DATE	DESCRIPTION	DESIGNER	REVIEWER

STATE OF CONNECTICUT — KEVIN M. SULLIVAN — No. 26560 — PROFESSIONAL ENGINEER

SCALE: HORZ.: VERT.: DATUM: HORZ.: VERT.: GRAPHIC SCALE

FUSS & O'NEILL
146 Hartford Road
Manchester, Connecticut 06040
860.646.2469
www.fando.com

OLD SAYBROOK PUBLIC SCHOOLS
ELECTRICAL DETAILS
KATHLEEN E. GOODWIN ELEMENTARY SCHOOL
HVAC UPGRADES

PROJ. No.: 20210255.A44
DATE: 04/03/2026

EP-501

C:\Users\Dinesh.patel\Documents\Old Saybrook - Electrical - CENTRAL- R25 - new_Dinesh.PatelQPYUA.rvt

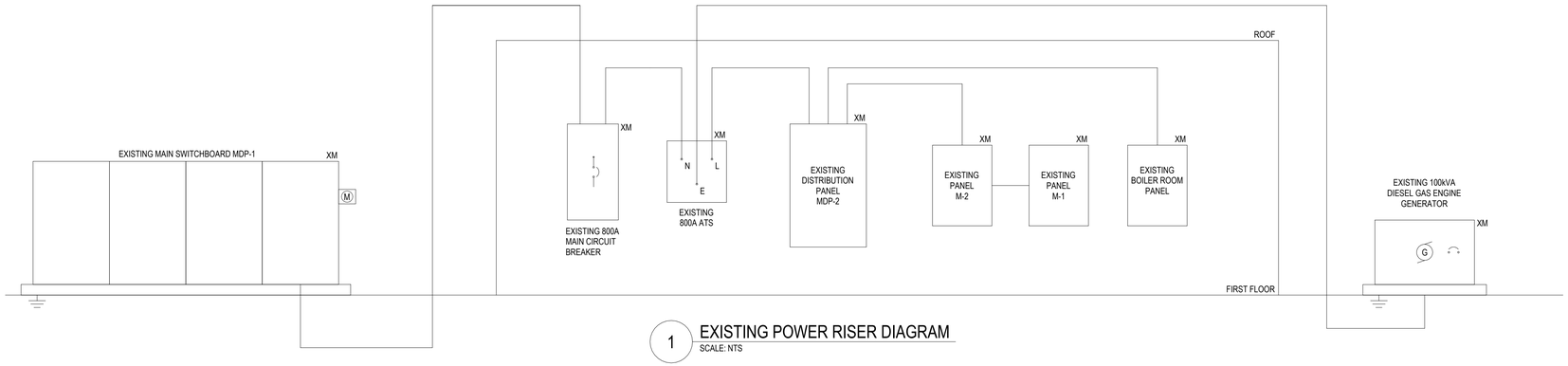

1 EXISTING POWER RISER DIAGRAM
SCALE: NTS

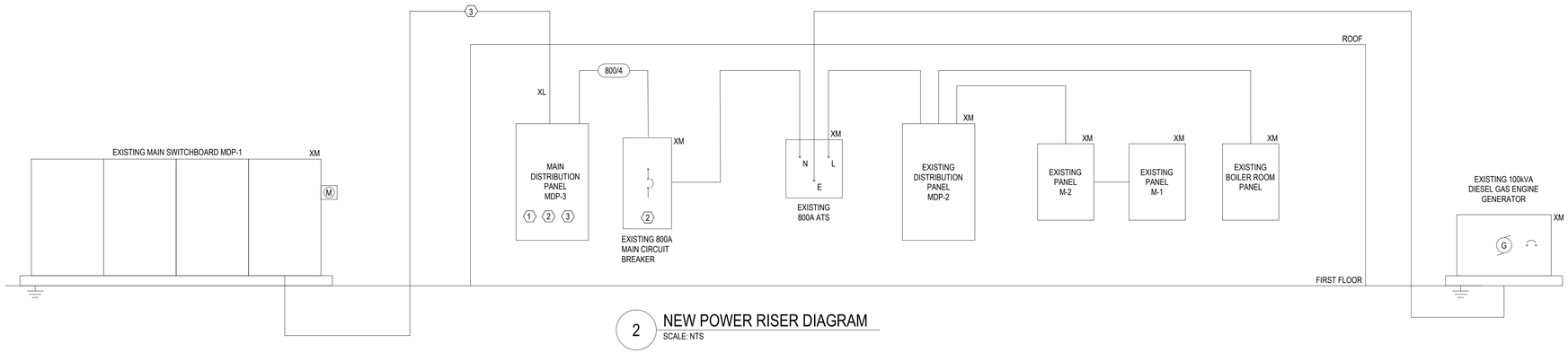

2 NEW POWER RISER DIAGRAM
SCALE: NTS

#	NOTES:
1.	ELECTRICAL CONTRACTOR SHALL INSTALL NEW 800A DISTRIBUTION BOARD REFER TO FLOOR PLANS FOR LOCATION
2.	ELECTRICAL CONTRACTOR SHALL REFEED EXISTING 800A BREAKER LUGS IN NEW MDP-3.
3.	ELECTRICAL CONTRACTOR SHALL EXTEND EXISTING MAIN FEEDER TO NEW 800A DISTRIBUTION BOARD MDP-3

No.	DATE	DESCRIPTION	DESIGNER	REVIEWER

STATE OF CONNECTICUT
KEVIN M. SULLIVAN
No. 28680
LICENSED
PROFESSIONAL ENGINEER

SCALE:
HORZ.:
VERT.:
DATUM:
HORZ.:
VERT.:
GRAPHIC SCALE

FUSS & O'NEILL
146 Hartford Road
Manchester, Connecticut 06040
860.646.2469
www.fando.com

OLD SAYBROOK PUBLIC SCHOOLS
ELECTRICAL RISER DIAGRAM
KATHLEEN E. GOODWIN ELEMENTARY SCHOOL
HVAC UPGRADES

PROJ. No.: 20210255.A44
DATE: 04/03/2026

EP-601

C:\Users\Dinesh.patel\Documents\Old Saybrook - Electrical - CENTRAL- R25 - new_Dinesh.PatelQPYUA.rvt

SWITCHBOARD 'MDP-3', 800 AMP, 120/208 VOLT, 3-PHASE, 4-WIRE & GND

INTERRUPTING CAPACITY: MATCH EXISTING MAIN: 800A MCB NEUTRAL: 800A MOUNTING: SURFACE

CIRCUIT No.	DESCRIPTION	LOAD kVA	OVERCURRENT DEVICE			REMARKS
			FRAME	TRIP	POLE	
1	RTU-1	36.75	110	110	3	
2	HP-1	7.49	80	80	2	
3	HP-2	7.49	80	80	2	
4	HP-3	17.29	60	60	3	
5	FCU-1	0.09	15	15	2	
6	FCU-2	0.09	15	15	2	
7	FCU-3	0.04	15	15	2	
8	FCU-4	0.31	15	15	2	
9	FCU-5	0.31	15	15	2	
10	FCU-6	0.04	15	15	2	
11	FCU-7	0.04	15	15	2	
12	FCU-8	0.09	15	15	2	
13	FCU-9	0.09	15	15	2	
14	FCU-10	0.09	15	15	2	
15	FCU-11	0.09	15	15	2	
16	FCU-12	0.09	15	15	2	
17	FCU-13	0.09	15	15	2	
18	WORK LIGHT AND GFI RECEPTACLES	0.25	20	20	1	
19	WORK LIGHT AND GFI RECEPTACLES	0.75	20	20	1	
20	AUTOMATIC TRANSFER SWITCH	138.75			3	TO EXISTING 800A CIRCUIT BREAKER VIA LUGS
21	Spare		20	20	1	
22	Spare		20	20	1	
23	Spare		15	15	2	
24	Spare		15	15	2	
25	Space				3	
26	Space				3	

MECHANICAL EQUIPMENT COORDINATION SCHEDULE

EQUIP. TAG	EQUIPMENT DESCRIPTION	HP	MCA	kVA	VOLT	PHASE	PANEL CIRCUIT No.	CIRCUIT BREAKER	FEEDER	SM	☒	⊣□	◿	∿	WP	(S)D	SEE NOTE
RTU-1	ROOF TOP UNIT		102.0	36.75	208	3	MDP-3-1	110A/3P	4#2,1#6G-1½"C				200AF/110AT	✓	✓		1
HP-1	VRF OUTDOOR UNIT		45.0	7.49	208	1	MDP-3-2	80A/2P	3#8,1#10G-¾"C				100AF/80AT	✓	✓		8
HP-2	VRF OUTDOOR UNIT		45.0	7.49	208	1	MDP-3-3	80A/2P	3#8,1#10G-¾"C				100AF/80AT	✓	✓		8
HP-3	VRF OUTDOOR UNIT		60.0	17.29	208	3	MDP-3-4	100A/3P	4#3,1#6G-1½"C				100AF/100AT	✓	✓		8
FCU-1	FAN COIL INDOOR UNIT		0.54	0.09	208	1	MDP-3-5	15A/2P	3#12,1#12G-¾"C	✓				✓			5,8
FCU-2	FAN COIL INDOOR UNIT		0.54	0.09	208	1	MDP-3-6	15A/2P	3#12,1#12G-¾"C	✓				✓			5,8
FCU-3	FAN COIL INDOOR UNIT		0.24	0.04	208	1	MDP-3-7	15A/2P	3#12,1#12G-¾"C	✓				✓			5,8
FCU-4	FAN COIL INDOOR UNIT		1.88	0.31	208	1	MDP-3-8	15A/2P	3#12,1#12G-¾"C	✓				✓			5,8
FCU-5	FAN COIL INDOOR UNIT		1.88	0.31	208	1	MDP-3-9	15A/2P	3#12,1#12G-¾"C	✓				✓			5,8
FCU-6	FAN COIL INDOOR UNIT		0.24	0.04	208	1	MDP-3-10	15A/2P	3#12,1#12G-¾"C	✓				✓			5,8
FCU-7	FAN COIL INDOOR UNIT		0.24	0.04	208	1	MDP-3-11	15A/2P	3#12,1#12G-¾"C	✓				✓			5,8
FCU-8	FAN COIL INDOOR UNIT		0.54	0.09	208	1	MDP-3-12	15A/2P	3#12,1#12G-¾"C	✓				✓			5,8
FCU-9	FAN COIL INDOOR UNIT		0.54	0.09	208	1	MDP-3-13	15A/2P	3#12,1#12G-¾"C	✓				✓			5,8
FCU-10	FAN COIL INDOOR UNIT		0.54	0.09	208	1	MDP-3-14	15A/2P	3#12,1#12G-¾"C	✓				✓			5,8
FCU-11	FAN COIL INDOOR UNIT		0.54	0.09	208	1	MDP-3-15	15A/2P	3#12,1#12G-¾"C	✓				✓			5,8
FCU-12	FAN COIL INDOOR UNIT		0.54	0.09	208	1	MDP-3-16	15A/2P	3#12,1#12G-¾"C	✓				✓			5,8
FCU-13	FAN COIL INDOOR UNIT		0.54	0.09	208	1	MDP-3-17	15A/2P	3#12,1#12G-¾"C	✓				✓			5,8

MECHANICAL SCHEDULE NOTES:

1. DISCONNECT SWITCH PROVIDED WITH EQUIPMENT, REFER TO MECHANICAL SCHEDULES FOR DETAILS.
2. CONTROLLER PROVIDED WITH EQUIPMENT. ELECTRICAL CONTRACTOR SHALL WIRE BRANCH CIRCUIT THROUGH CONTROLLER MOUNTED BY MECHANICAL CONTRACTOR
3. VFD PROVIDED WITH EQUIPMENT, ELECTRICAL CONTRACTOR SHALL WIRE BRANCH CIRCUIT THROUGH VFD MOUNTED BY MECHANICAL CONTRACTOR
4. STARTER PROVIDED WITH EQUIPMENT, ELECTRICAL CONTRACTOR SHALL WIRE BRANCH CIRCUIT THROUGH STARTER MOUNTED BY MECHANICAL CONTRACTOR
5. CONDENSATE PUMP PROVIDED WITH EQUIPMENT, REFER TO FLOOR PLANS FOR DETAILS. ADDITIONAL NUETRAL WIRE HAS BEEN PROVIDED FOR 120V PUMP CONNECTIONS
6. DUCT MOUNTED SMOKE DETECTOR PROVIDED BY ELECTRICAL CONTRACTOR, INSTALLED BY MECHANICAL CONTRACTOR, WIRED BY ELECTRICAL CONTRACTOR
7. DUCT MOUNTED CARBON DIOXIDE DETECTOR PROVIDED BY ELECTRICAL CONTRACTOR, INSTALLED BY MECHANICAL CONTRACTOR, WIRED BY ELECTRICAL CONTRACTOR
8. DISCONNECT SWITCHES FURNISH AND INSTALLED BY ELECTRICAL CONTRACTOR

SCHEDULE NOTES:

1. EQUIPMENT LOCATIONS SHOWN ON ELECTRICAL PLANS ARE APPROXIMATE LOCATIONS ONLY. REFER TO MECHANICAL AND PLUMBING DRAWINGS FOR EXACT LOCATIONS.
2. REFER TO MECHANICAL SCHEDULES FOR ADDITIONAL INFORMATION AND DETAILS
3. ALL CONDUCTOR SIZES ARE FOR COPPER CONDUCTORS.
4. ADDITIONAL NUETRAL WIRES HAVE BEEN SHOWN FOR ALL FEEDERS FOR POTENTIAL CONTROLS REQUIREMENTS. CONFIRM THE NEED FOR NEUTRAL WITH SUBMITTED EQUIPMENT

LEGEND OF FEEDER SIZES-COPPER CONDUCTORS (75°C)

FEEDER SYMBOL	CONDUCTORS (3Φ, 3W) WITH GROUND	RACEWAY SIZE	CONDUCTORS (3Φ, 4W) WITH GROUND	RACEWAY SIZE	NOMINAL AMPERE RATING
60/3	3#6,1#10G.	3/4"C			60
60/4			4#6,1#10G.	1"C	
100/3	3#3,1#8G.	1¼"C			100
100/4			4#3,1#8G.	1¼"C	
125/3	3#1,1#6G.	1½"C			125
125/4			4#1,1#6G.	1½"C	
150/3	3#1/0,1#6G.	1½"C			150
150/4			4#1/0,1#6G.	2"C	
200/3	3#3/0,1#6G.	2"C			200
200/4			4#3/0,1#6G.	2"C	
225/3	3#4/0,1#4G.	2"C			225
225/4			4#4/0,1#4G.	2½"C	
250/3	3#250kCMIL,1#4G.	2½"C			250
250/4			4#250kCMIL,1#4G.	2½"C	
300/3	3#350kCMIL,1#4G.	3"C			300
300/4			4#350kCMIL,1#4G.	3"C	
400/3	3#600kCMIL,1#3G.	3½"C			400
400/4			4#600kCMIL,1#3G.	4"C	
500/3	6#250kCMIL,2#2G.	(2) 2½"C			500
500/4			8#250kCMIL,2#2G.	(2) 2½"C	
600/3	6#350kCMIL,2#1G.	(2) 3"C			600
600/4			8#350kCMIL,2#1G.	(2) 3"C	
800/3	6#600kCMIL,2#1/0G.	(2) 4"C			800
800/4			8#600kCMIL,2#1/0G.	(2) 4"C	
1000/3	9#400kCMIL,3#2/0G.	(3) 3"C			1000
1000/4			12#400kCMIL,3#2/0G.	(3) 3"C	
1200/3	9#600kCMIL,3#3/0G.	(3) 4"C			1200
1200/4			12#600kCMIL,3#3/0G.	(3) 4"C	
1600/3	12#600kCMIL,4#4/0G.	(4) 4"C			1600
1600/4			16#600kCMIL,4#4/0G.	(4) 4"C	
2000/3	15#600kCMIL,5#250kCMILG.	(5) 4"C			2000
2000/4			20#600kCMIL,5#250kCMILG.	(5) 4"C	
2500/3	18#600kCMIL,6#350kCMILG.	(6) 4"C			2500
2500/4			24#600kCMIL,6#350kCMILG.	(6) 4"C	
3000/3	24#600kCMIL,8#400kCMILG.	(8) 4"C			3000
3000/4			32#600kCMIL,8#400kCMILG.	(8) 4"C	
3500/3	24#700kCMIL,8#500kCMILG.	(8) 4"C			3500
3500/4			32#700kCMIL,8#500kCMILG.	(8) 4"C	
4000/3	24#750kCMIL,8#500kCMILG.	(8) 4"C			4000 (NOTE 3)
4000/4			32#750kCMIL,8#500kCMILG.	(8) 4"C	

NOTES:

1. ALL FEEDERS GREATER THAN 150 FEET IN LENGTH SHALL INCREASE TO THE NEXT AVAILABLE FEEDER TO ACCOMMODATE FOR VOLTAGE DROP.
2. SERVICE FEEDERS FROM UTILITY TRANSFORMER TO SERVICE ENTRANCE EQUIPMENT SHALL NOT REQUIRE GROUND CONDUCTOR
3. 4000A SERVICE FEEDERS FROM UTILITY TRANSFORMER TO SERVICE ENTRANCE EQUIPMENT SHALL BE 90 DEGREE RATED.

No. | DATE | DESCRIPTION | DESIGNER | REVIEWER

STATE OF CONNECTICUT · ERVIN M. BULDAN · No. 29560 · LICENSED PROFESSIONAL ENGINEER

SCALE: HORZ.: VERT.: DATUM: HORZ.: VERT.: GRAPHIC SCALE

FUSS & O'NEILL
146 Hartford Road
Manchester, Connecticut 06040
860.646.2469
www.fuss-o.com

OLD SAYBROOK PUBLIC SCHOOLS

ELECTRICAL SCHEDULES

KATHLEEN E. GOODWIN ELEMENTARY SCHOOL
HVAC UPGRADES

PROJ. No.: 20210255.A44
DATE: 04/03/2026

EP-602

C:\Users\Dinesh.patel\Documents\Old Saybrook - Electrical - CENTRAL- R25 - new_Dinesh.PatelQPYUA.rvt