TurfBreeze

2026

Owner's Manual

SubAir

SubAir Systems, LLC
1164 Industrial Avenue
Graniteville, SC 29829
(866) 641-6663
TurfBreeze.com
Jan 2026

Thank you.

We appreciate your choosing TurfBreeze®, the pioneer and leader in surface aeration technology. Your TurfBreeze product was built to the highest standards in the industry, and has been meticulously engineered to provide reliable, trouble free service. However, as with any power equipment product, customer safety and satisfaction largely depend upon understanding the product's intended use and operation. Negligence or being unfamiliar with the equipment, or how to use it properly, can result in personal injury or damage to the equipment, in addition to a misleading impression of quality or performance. We urge you to read this manual before installing or operating your new equipment, and always follow the operating instructions, and safety precautions herein.

Please consider this owner's manual a permanent part of your TurfBreeze product, and always keep it available for reference.

TurfBreeze products are always backed by the TurfBreeze customer support team which is here to offer you fast, courteous service. For more information visit our website at www.TurfBreeze.com , or call 1-866-641-6663. If you would prefer to write to us, direct your letter to:

SubAir Systems, LLC
Customer Service
1164 Industrial Avenue
Graniteville, SC, 29829 USA.

Notice

This document is intended to aid in the proper installation and use of TurfBreeze fans. It is intended to provide general guidance based on our experience, and should not replace any industry standards or other pertinent regulations.

Precautions

Federal regulations covering safety for construction are published in the Safety and Health Regulations for Construction under the Department of Labor, Occupational Safety and Health Administration (OSHA). All electrical installations must be made by licensed electricians and must conform to all applicable federal and local electrical codes.

Warranty

SubAir Systems LLC warranties are contingent upon proper design and installation of not only the materials and equipment provided by SubAir, but also the connecting electrical systems that become part of the complete system. See the warranty section of the operating manual for full details.

SubAir is not responsible for injury or damage resulting from improper installation, any noncompliance with the guidelines in this document, or from any use outside of the application for which it was sold.

State of California

Proposition 65

⚠ **WARNING**

- ***This product contains or emits chemicals or substances that have been determined by the state of California to cause cancer or birth defects or other reproductive harm.***

NOTICE: TurfBreeze TB-59-G model fans for sales in the state of California meet or exceed CARB requirements.

CONTENTS

Receiving, Handling, and Storage **6**
Receiving 6
Handling 6
Storage 6
General Service and Maintenance **7**
Lubrication 7
Lubrication Intervals 7
Recommended Lubricants 7
Pillow Block Bearings 7
Oscillating Assemblies 7
General Wiring and Controls 7
Installation & Startup **8**
Installation 8
Control Package Installation Options 11
Start Up 19
Oscillating Assembly **20**
TB-38/TB-47 Oscillating Assembly 20
Component Diagram 20
TB-38/TB-47 (Small) Oscillator Coverage Angles 21
TB-59 Oscillating Assembly 22
Component Diagram 22
TB-59 (Large) Oscillator Coverage Angles 23
TB-38 ..... **24**
Specifications 24
TB-38 Physical Data 24
TB-38 Fan Performance Data 24
TB-38 Electrical Data 25
TB-38 Component Diagram 26
TB-47 ..... **27**
Specifications 27
TB-47 Physical Data 27
TB-47 Fan Performance Data 27
TB-47 Electrical Data 27
TB-47 Component Diagram 28
TB-59DD Direct Drive **29**
Specifications 29

TB-59DD Direct Drive Physical Data 29
TB-59DD Direct Drive Fan Performance Data 29
TB-59DD Direct Drive Electrical Data 29
Operation and Maintenance 30
TB-59DD Direct Drive Component Diagram 31
TB-59P Premium 32
Specifications 32
TB-59P Premium Physical Data 32
TB-59P Premium Fan Performance Data 32
TB-59P Premium Fan Electrical Data 32
Maintenance 33
Belt Tensioning 33
TB-59P Premium Component Diagram 35
TB-62G Gas 36
Specifications 36
TB-62G Physical Data 36
TB-62G Fan Performance Data 36
Maintenance 36
Gas Fan Belts 36
Re-Tensioning Procedure: 37
New Belt Procedure: 38
Engine Maintenance Schedule (Briggs & Stratton excerpt) 39
Oil Recommendations (Briggs & Stratton excerpt) 40
Fuel Recommendations (Briggs & Stratton excerpt) 41
Inline Fuel Filter (Briggs & Stratton excerpt) 41
TB-62G Component Diagram 42
TB-62G Electrical Schematic 43
Standard Control Package 44
Application Notes and Instructions 44
Single Phase Control Package Component Diagram 45
Single Phase Control Package Electrical Schematics 46
190-240v, Single Phase, Standard 46
Three Phase Control Package Component Diagram 47
Three Phase Control Package Electrical Schematics 48
190-240v, Three Phase 48
460-480v, Three Phase 49
Variable Frequency Drive Control Package Option 50
Application Notes and Instructions 50
VFD Control Package Component Diagram 51

VFD Control Package Electrical Schematics 52
190-240V, Single Phase, VFD 52
190-380V, Three Phase, VFD 53
460-480V, Three Phase, VFD 54
Timer Package Option 55
Application Notes and Instructions 55
High Voltage Timer Package 56
High Voltage Timer Package Electrical Schematic 57
Fan Trailers 60
Towing Notes and Instructions 60
Fan Anchoring 60
Trailer Component Diagram 61
Trailer Maintenance and Servicing 61
Wheel Bearings 61
Appendix A, Electric Motor Wiring Diagrams 62
Baldor 7.5HP 208-230/460v, 3Ø 63
Baldor 7.5HP 208-230v, 1Ø 64
Baldor 5HP 208-230/460v, 3Ø 65
Baldor 5HP 208-230v, 1Ø 66
Leeson 5HP 208-230/460v, 3Ø 67
Leeson 5HP 208-230v, 1Ø 68
Baldor 3HP 208-230/460v, 3Ø 69
Baldor 3HP 208-230v, 1Ø 70
Baldor 2HP 208-230/460v, 3Ø 71
Baldor 2HP 208-230v, 1Ø 72
Appendix B, Timer Programming Manual ..... Error! Bookmark not defined.
Appendix C, TB-62G Engine Manual 73

Receiving, Handling, and Storage

Receiving

Immediately after accepting delivery, note any damage or shortage on the Bill of Lading, and file any claims for damage or loss in transit.

TurfBreeze fans are carefully inspected before leaving the factory, but all nuts, bolts, and fasteners should be checked prior to installation to ensure that nothing has become loose, or been tampered with during shipping.

Handling

It is recommended that equipment featuring fork truck or similar equipment be used to unload the pallet as it was shipped from TurfBreeze. If fork truck or similar equipment is not available then remove the peripheral components (fan pole, control package, etc.) from the pallet, and then unload the fan by itself using the lifting lug on the top of the housing.

IMPORTANT: Note that this lifting point is only designed to support the combined weight of the fan and oscillating assembly. The fan pole, shipping pallet, or any other items that may be contributing additional weight should be disconnected and or removed before lifting by the housing's lifting lug.

Use of a TurfBreeze fan trailer is the safest and most likely the easiest way to transport fans longer distances. However, if any other type of equipment is going to be used be sure to add additional support straps to provide lateral and rotational stability. This will help reduce the risk of damage due to spinning, swinging, or other instability while underway. Care must be taken to NEVER DROP THE FAN. This will almost always cause the housing to become out of round, which will negatively affect the performance in addition to potentially causing interference damage between the housing and the blades. If a fan is accidentally dropped always be sure to check the impeller (fan blade) tip clearance prior to operating the fan.

Make absolutely certain that there is no contact between the fan housing and fan blade anywhere in the rotation.

Catastrophic failure will likely occur if the blade makes contact with the housing at any time during operation.

Storage

If the fans are to be stored for an extended period, such as over the winter, it is recommended that they be cleaned and coated with a rust inhibiting aerosol lubricant such as WD-40 prior to storing. The fans should be stored in a dry area shielded from the weather. If a protected storage area is not available TurfBreeze fan covers, custom tailored for each model fan, are available. The fan blade should be rotated at least once a month to keep bearing grease from settling. As the grease settles it allows corrosion to form on any uncoated surfaces inside the bearing. If power is not available in the storage location to rotate the fans, then rotating the blades by hand for 20 seconds will suffice.

For more information call (866) 641-6663, or visit us on the web at www.turfbreeze.com.

General Service and Maintenance

Lubrication

All TurfBreeze motor bearings are lubricated during assembly, and unless they are stored for an extended time prior to operation, do not require any lubrication prior to initial use. Refer to the guidelines below for re-lubrication specifications.

Lubrication Intervals

• Seasonal Use*, All Motors and Shaft Bearings

- Re-lubricate annually just prior to operation

• Continuous Use, 1800 RPM Motor and Shaft Bearings

- Re-lubricate every 6,000 Hrs.

• Continuous Use, 1200 RPM Motors

- Re-lubricate every 9,000 Hrs.

* Both used and new motors left idle for 6 months or more should be lubricated before use.

Recommended Lubricants

• Exxon Mobil Polyrex EM

• Shell Dolium R

• Chevron SR1 2

Amount to add (all motors) - 0.16 fluid ounces

TIP - Measure the fluid ounces of grease discharged per stroke from your grease gun, and then determine exactly how many strokes are required to get 0.16 fluid ounces. For example, if you measure 0.0624 fl.-oz. out of one full stroke then it will require (0.16/0.0624) = 2.6 strokes.

Pillow Block Bearings

All belt drive TurfBreeze fan models utilize high quality, sealed pillow block bearings that require no further lubrication for the life of the fan.

Oscillating Assemblies

The linkage components should be inspected for looseness and corrosion monthly during operation. If evidence of corrosion is detected then a topical coating of a corrosion inhibiting spray is recommended. Sprays or chemicals that dry to a film or waxy finish are preferred as they will collect less airborne dust and debris.

The main oscillating hub should be greased annually by removing the center cap, and simply topping off the inner bearing compartment with common wheel bearing grease. Note that it is not recommended that grease be injected under pressure, or through a grease fitting.

General Wiring and Controls

Wire terminals, circuit components, and wire insulation should be inspected initially prior to startup, and then annually thereafter. During subsequent inspections also check for any signs of melting, arcing, smoke, and wire or component discoloration due to heat in addition to connection fastener tensions. These are often signs of a degrading contact point and are always precursors to component failure.

Installation & Startup

Installation

1. A valve box as shown below is recommended, but not required. Keep in mind that it is suggested that ground and fan pole be oriented such that the control package and wiring are facing away from the green. This is to provide a cleaner appearance from the area of play. Once the ground pole has been placed in the concrete and angled and leveled properly with a bubble level, allow the concrete to cure for at least two weeks before continuing on to step two.

Ground pole concrete must cure for a minimum of two weeks prior to installing the fan pole and fan.

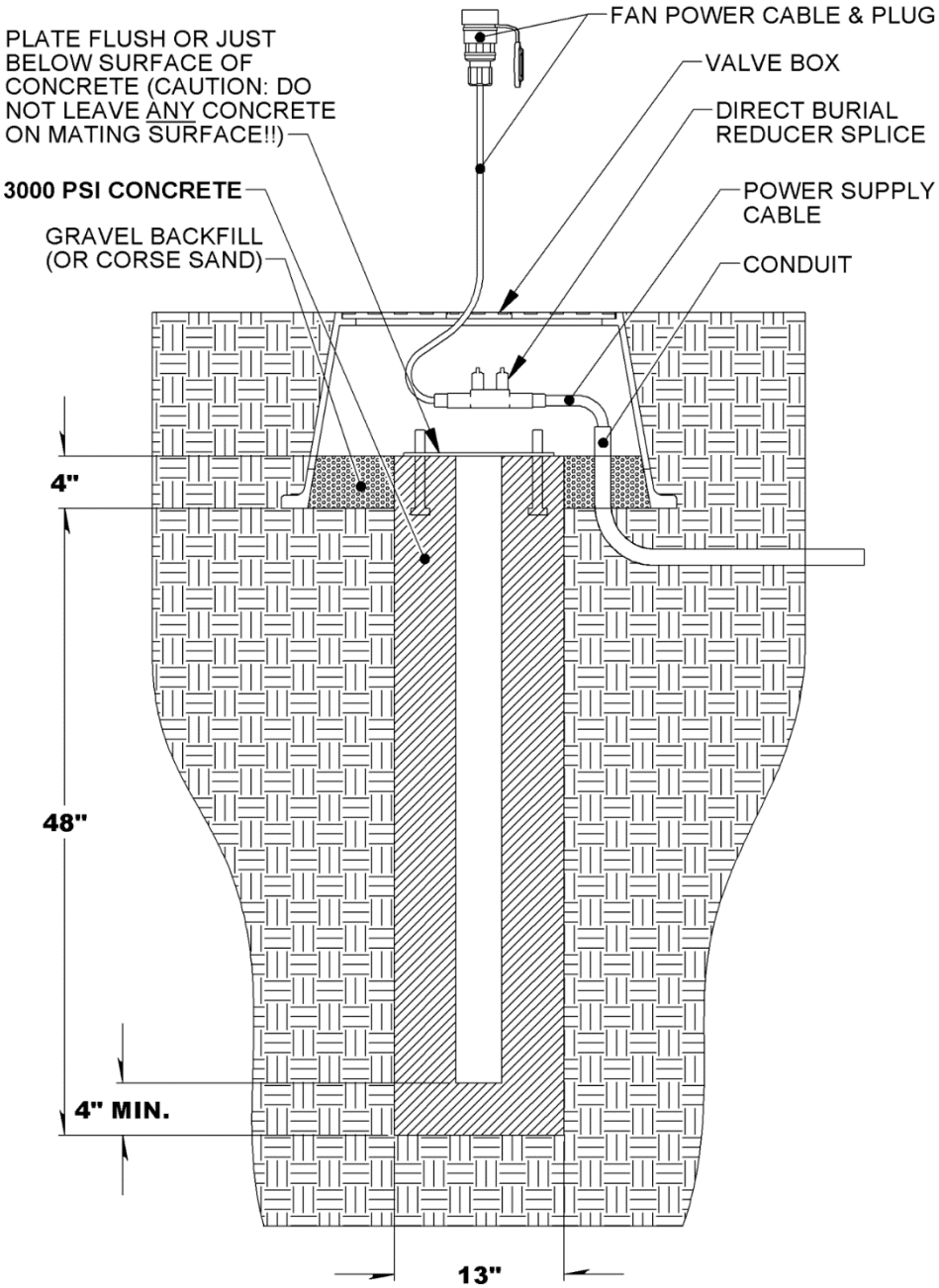

Figure 1: Standard ground pole installation detail for fan poles less than 7 feet tall

RECOMMENDED REINFORCED GROUND POLE INSTALLATION FOR FAN POLES ABOVE 7'.

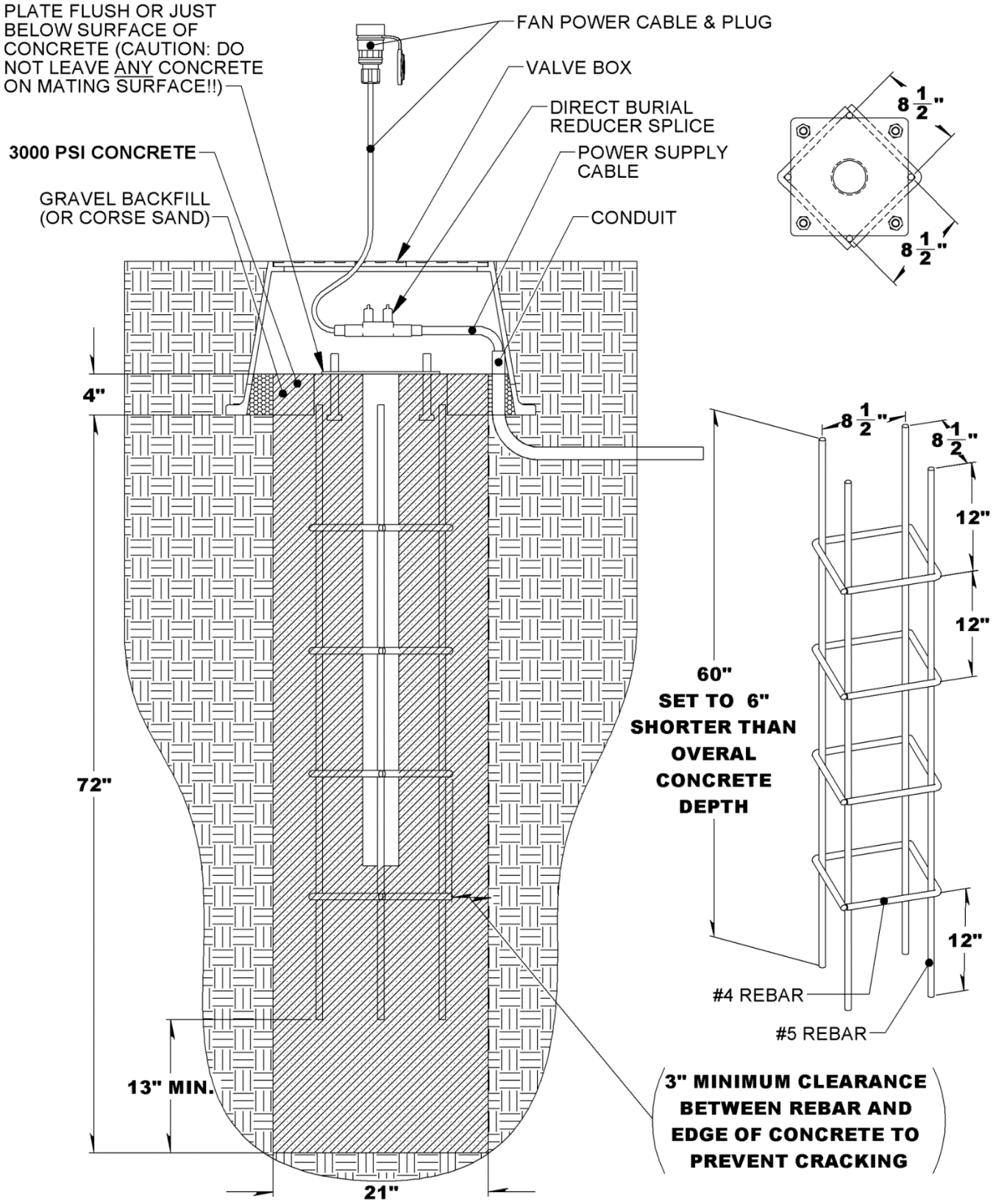

2. After the ground pole installation has been allowed to cure two weeks Install the fan pole such that the control package and wiring are facing away from the green.
3. Place the fan and oscillating assembly on top of the fan pole with the set bolts facing away from the green. Starting at the top, lightly tighten the (2) set bolts to square the oscillating assembly on the fan. Once each of the set bolts are snug, finish tightening each bolt such that the fan doesn't spin when given a moderate push on side of the inlet bell. Be careful not to over tighten the bolts as they may damage or weaken the fan pole.

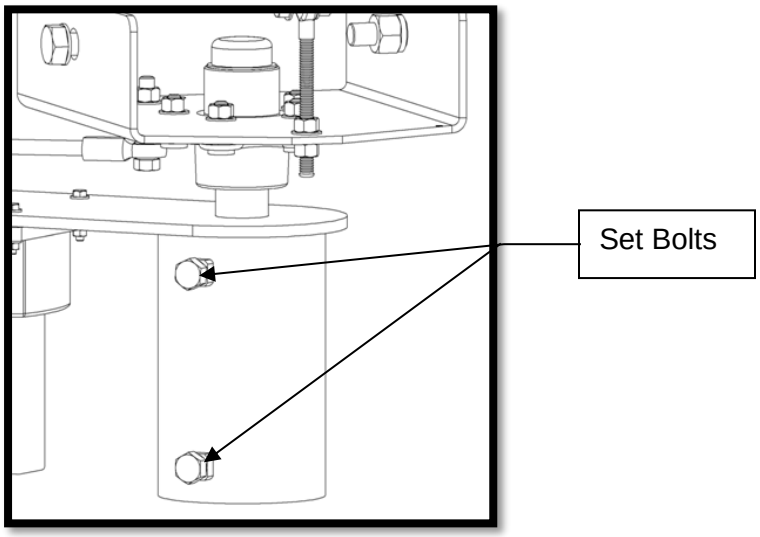

Step 4 below should be completed either prior to connecting to the power supply, or with the power sufficiently locked out at the power source, and should be performed by a qualified electrician.

4. Disassemble the provided female power plug, route the power supply cable through the back shell of the plug, and terminate the individual stripped ends of the wires. Be sure to us dielectric grease on all plug sealing surfaces as well as the plug face itself. This will prevent moisture from reaching the energized components inside the plug

Control Package Installation Options

190-480V STANDARD REMOTE MOUNT CONTROLS:

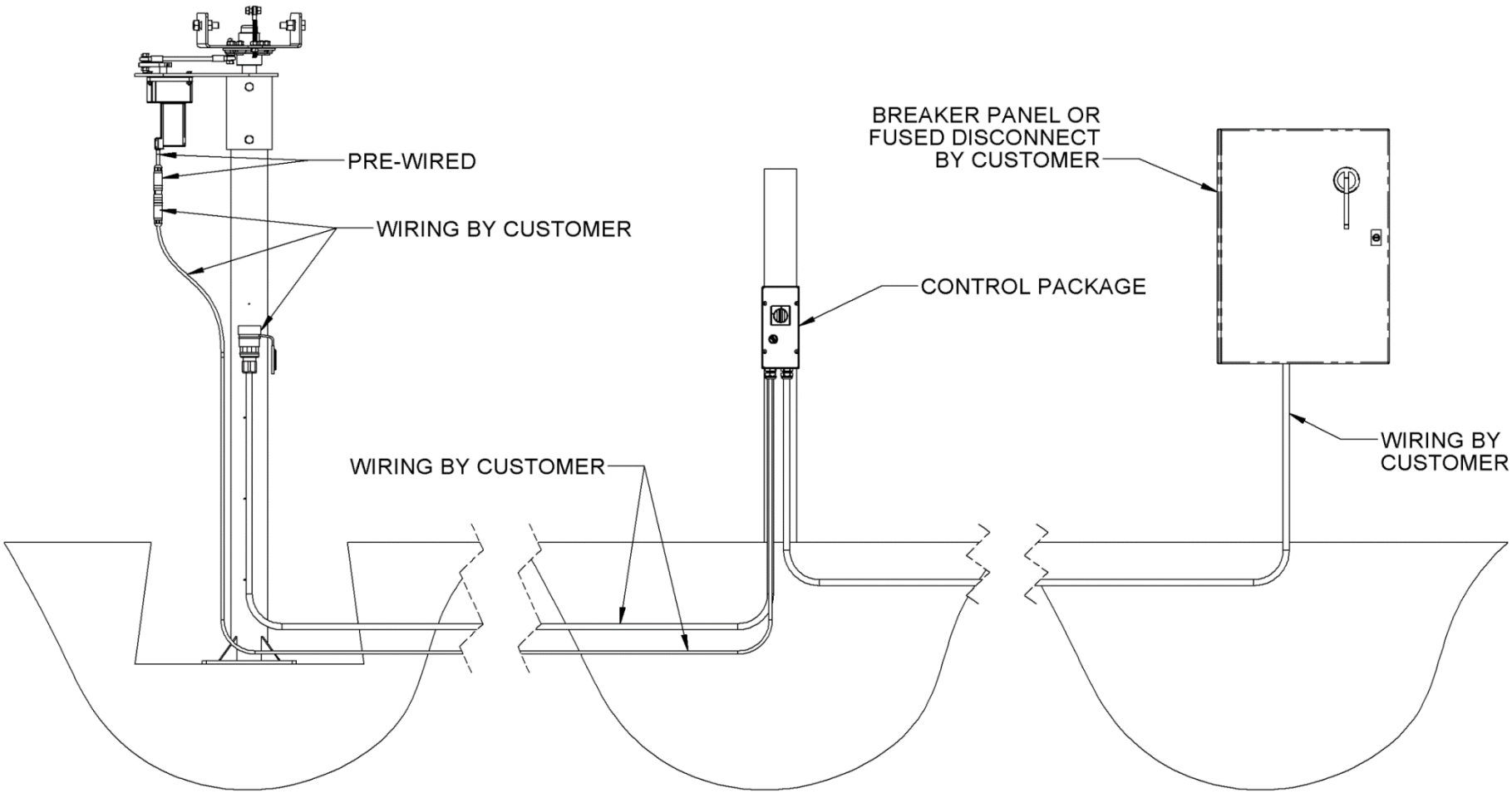

190-240V REMOTE MOUNT CONTROLS WITH TIMER OPTION INSTALLATION EXAMPLE:

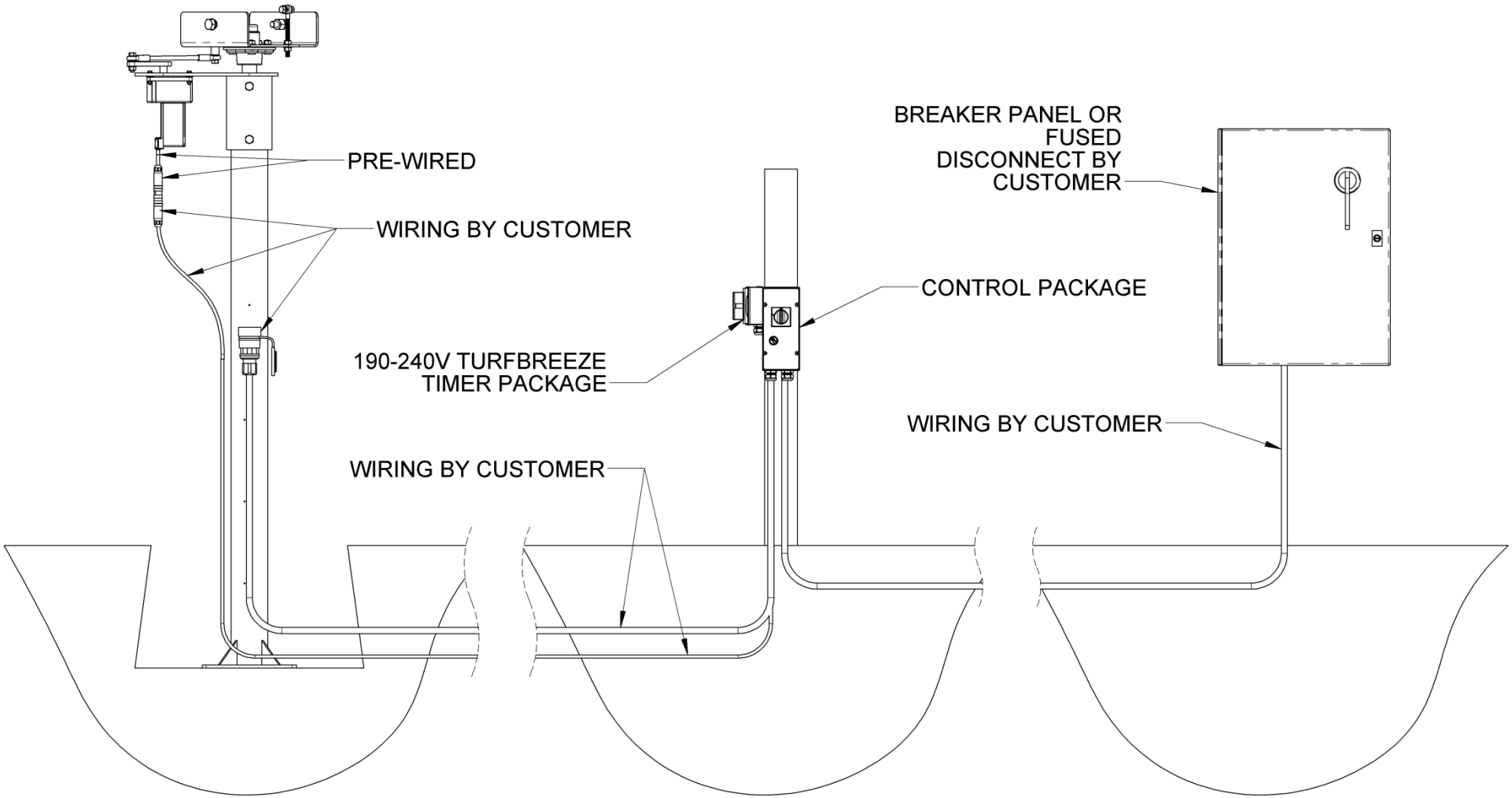

380-480V TIMER PACKAGE INSTALLATION EXAMPLE

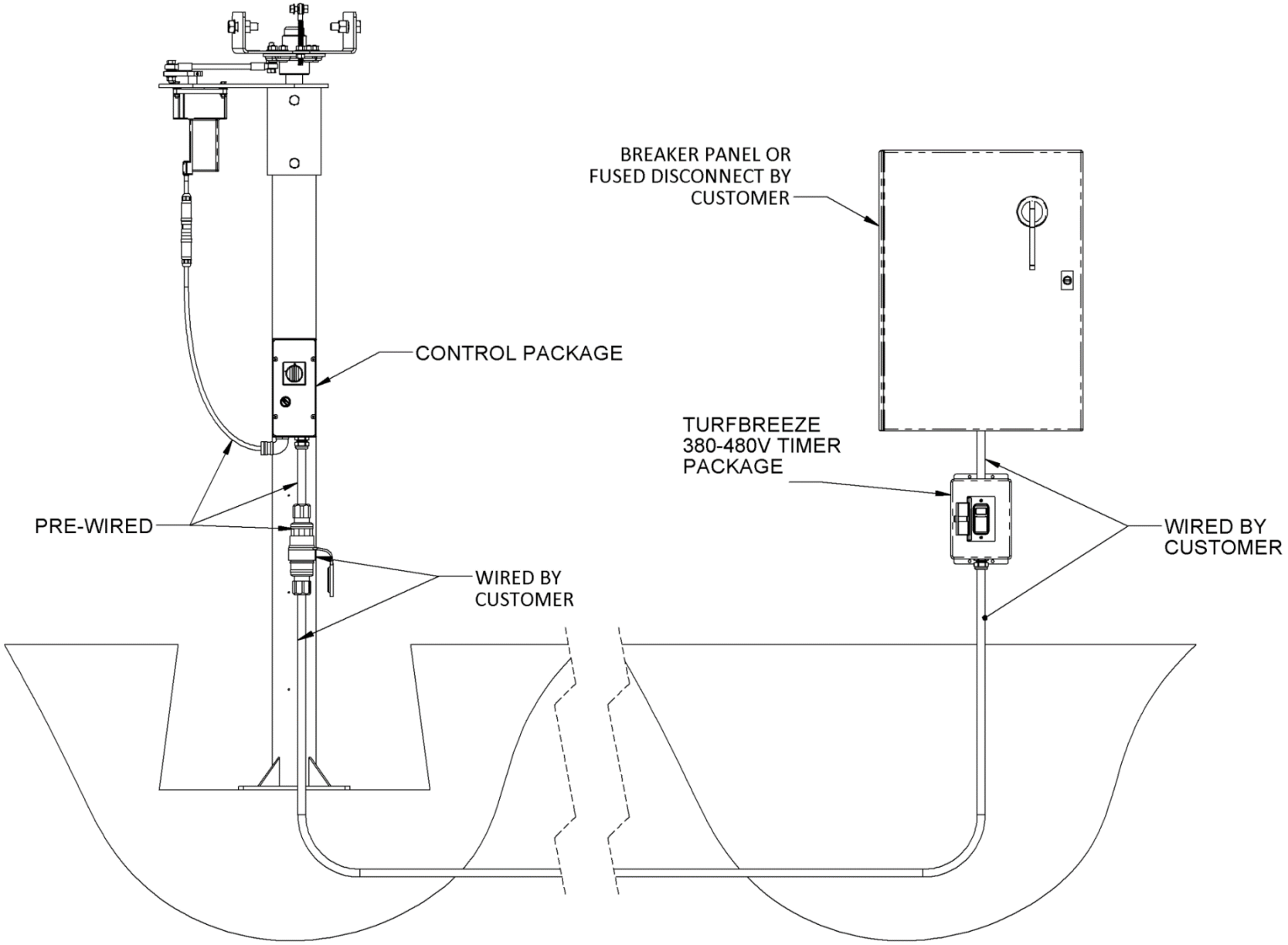

380-480V REMOTE MOUNT CONTROLS WITH TIMER OPTION INSTALLATION EXAMPLE:

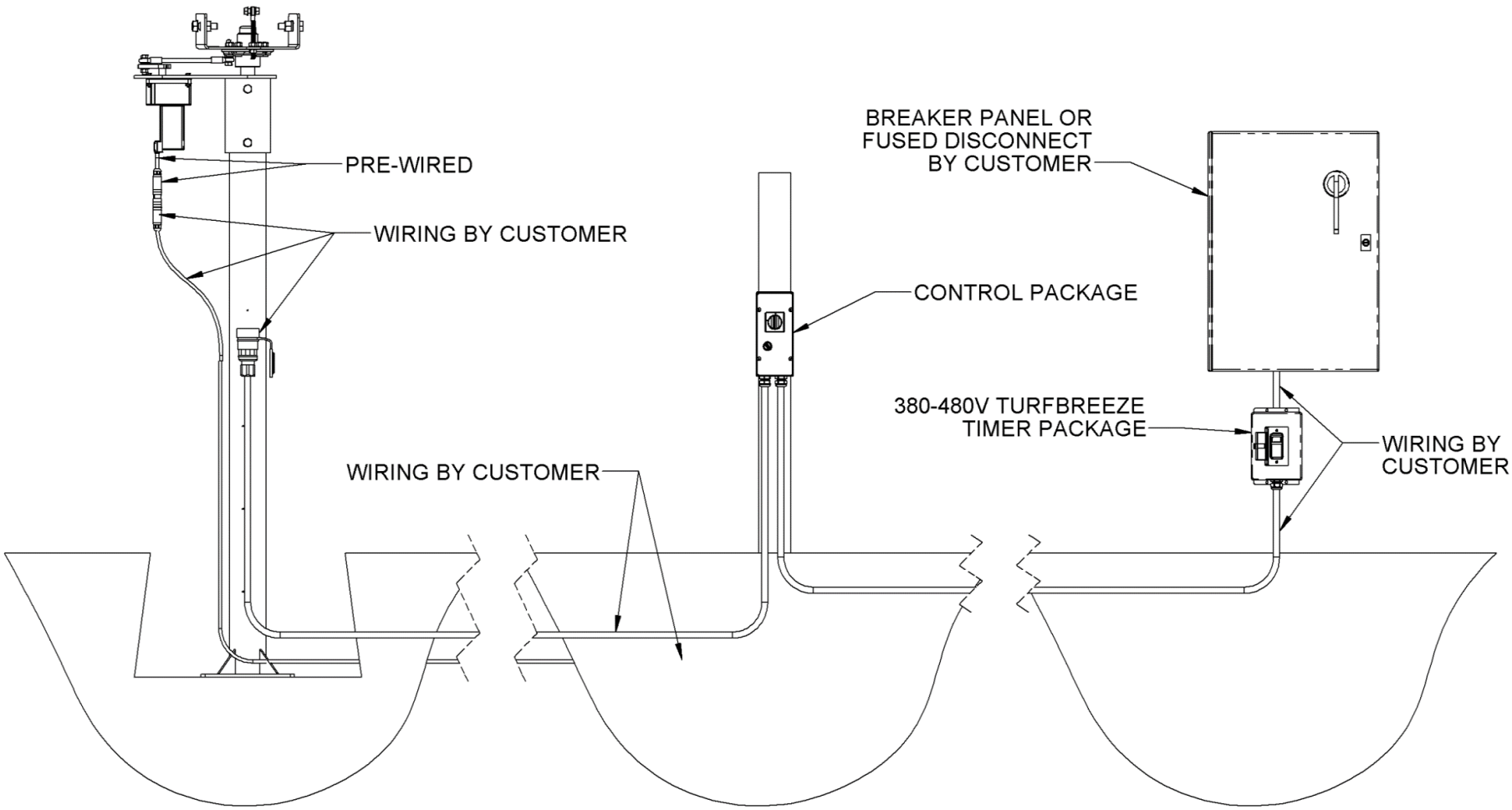

TYPICAL VFD CONTROL INSTALLATION

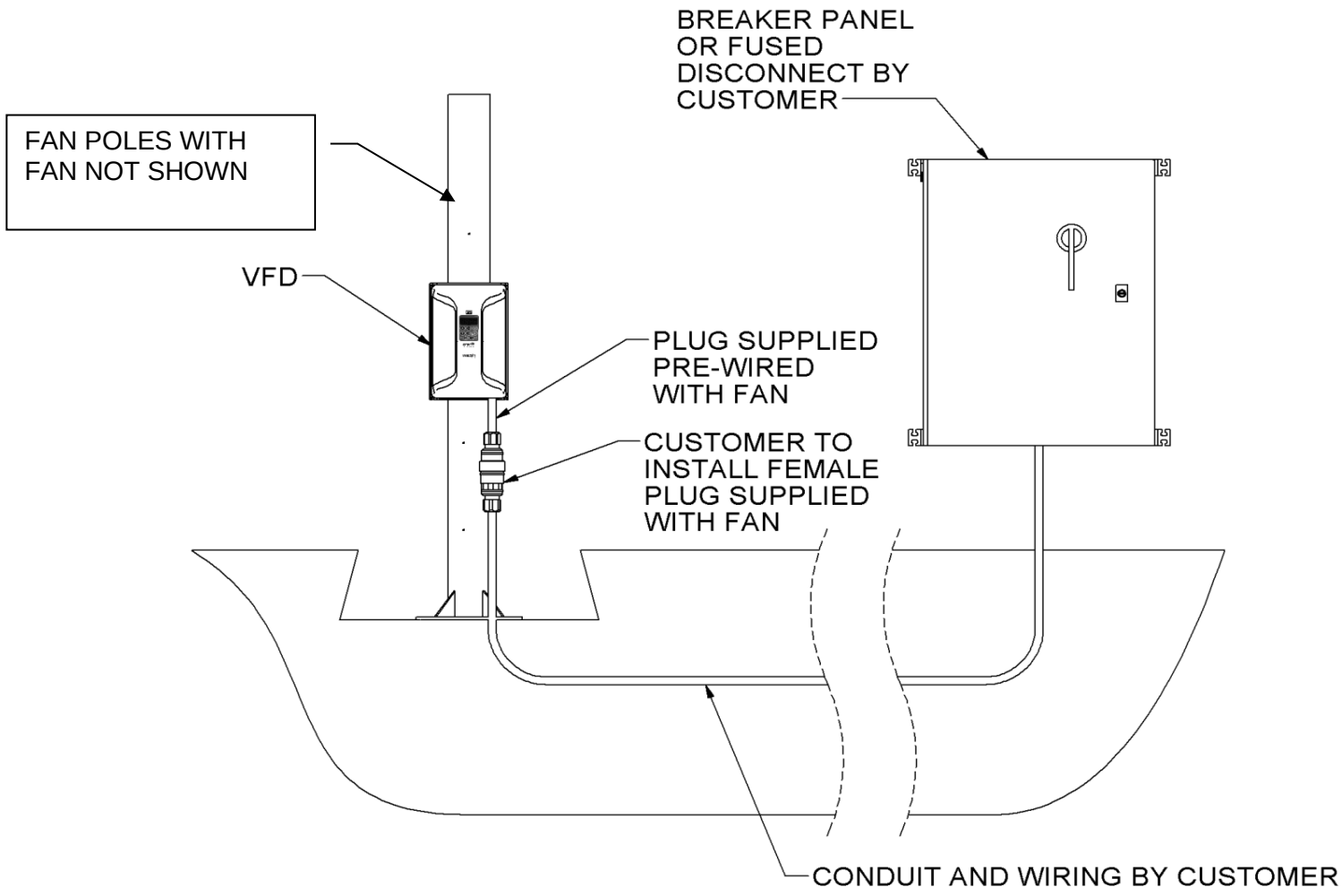

TYPICAL VFD CONTROL WITH TIMER OPTION INSTALLATION

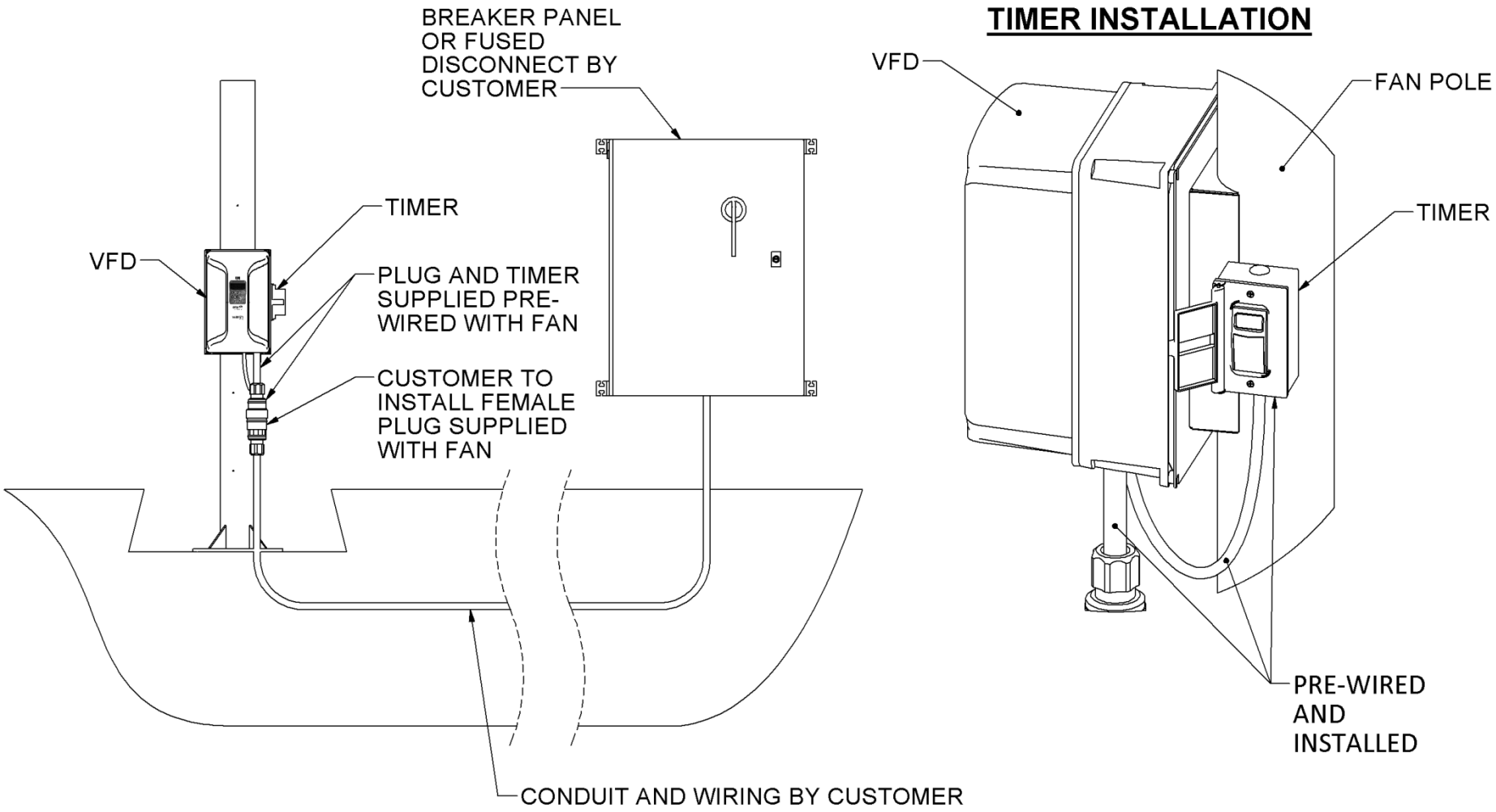

REMOTE VFD CONTROL INSTALLATION

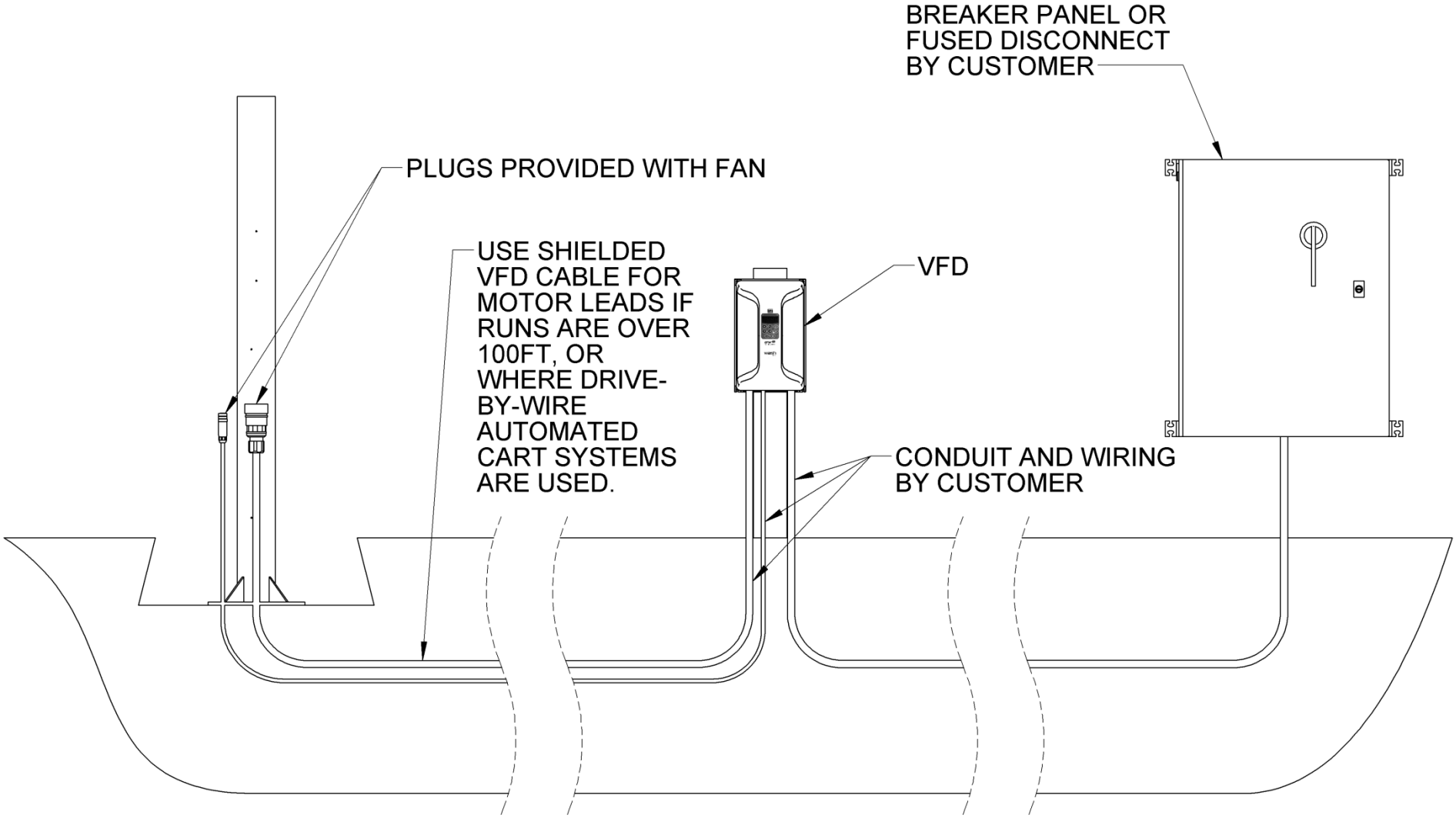

REMOTE VFD CONTROL WITH TIMER OPTION INSTALLATION

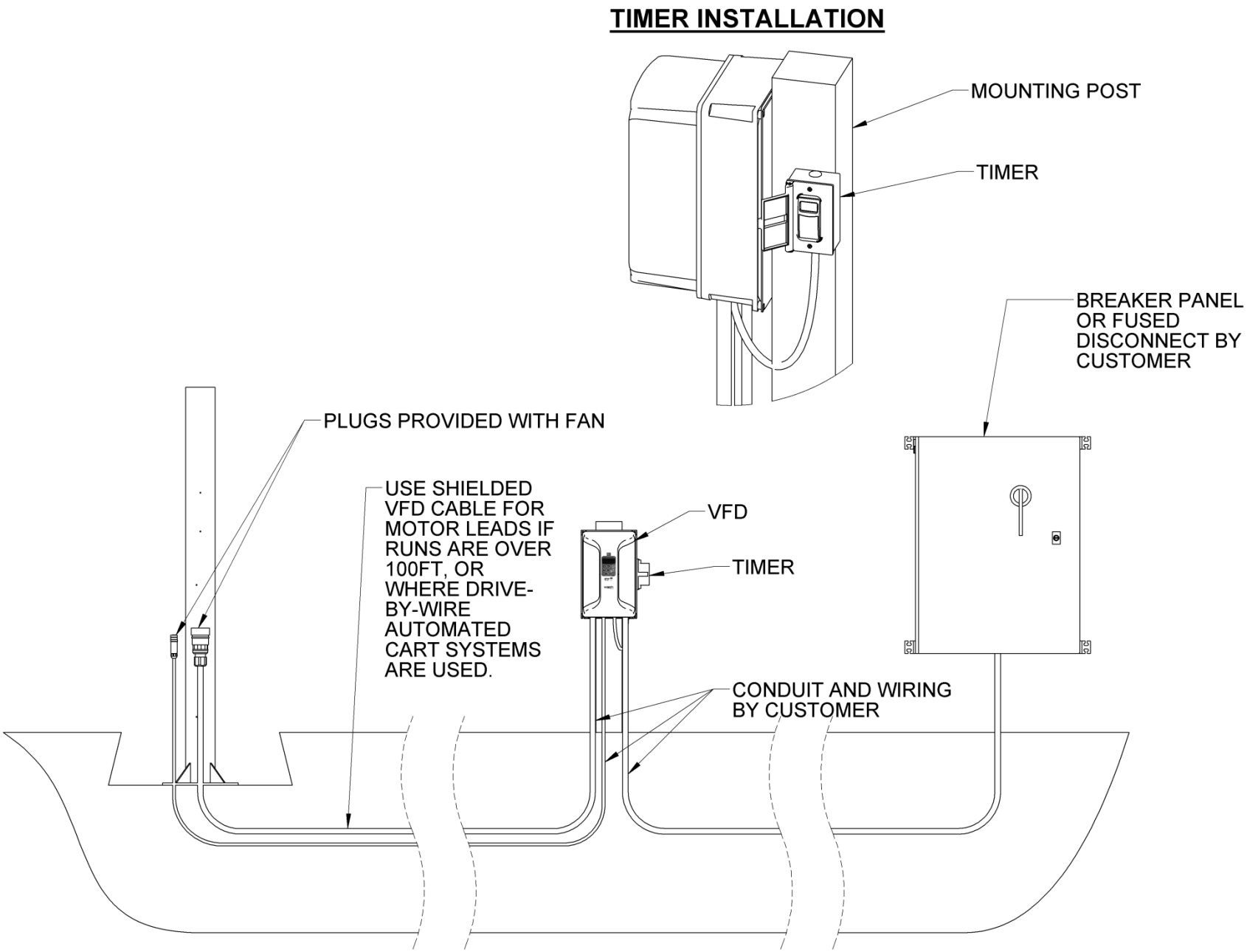

Start Up

1. Double check for proper wire sizing and over-current protection rating (see electrical data sections in this manual)
2. Visually inspect the fan blade tip clearance, and internal housing area for any foreign objects.

All electrical work and measurements should be performed by a qualified electrician.

3. Initially bump the fan to check rotation by quickly switching power on and then off.
    a. If the rotation is incorrect remove power and swap the motor leads in terminals T1, and T2 in the control package.

During steady state operation, the supply voltage and current should be within +/- 10% of nameplate rating on motor. If the operating voltage is outside of this 10% range immediately contact TurfBreeze for further instruction before continuing use. Failure to cease operation may result in irreparable damage to the motor or electrical components, and will void the product warranty.

4. Visually inspect the oscillating system through a minimum of (2) two cycles to ensure that it is operating correctly without interference to any of the linkage components.
5. Adjust the rod end assembly position in the crank arm to fine tune green coverage. If more coverage is required, move the connection outward away from the gear motor's shaft. If coverage is still insufficient, move the rod end connection at the U-Bracket to the next hole closer to the center of the fan. Loosen the (2) set bolts and rotate entire assembly for overall coverage adjustment to the left or right. Re-tighten bolts per the instructions given in step 3 of the Installation section.

Oscillating Assembly

TB-38/TB-47 Oscillating Assembly

Component Diagram

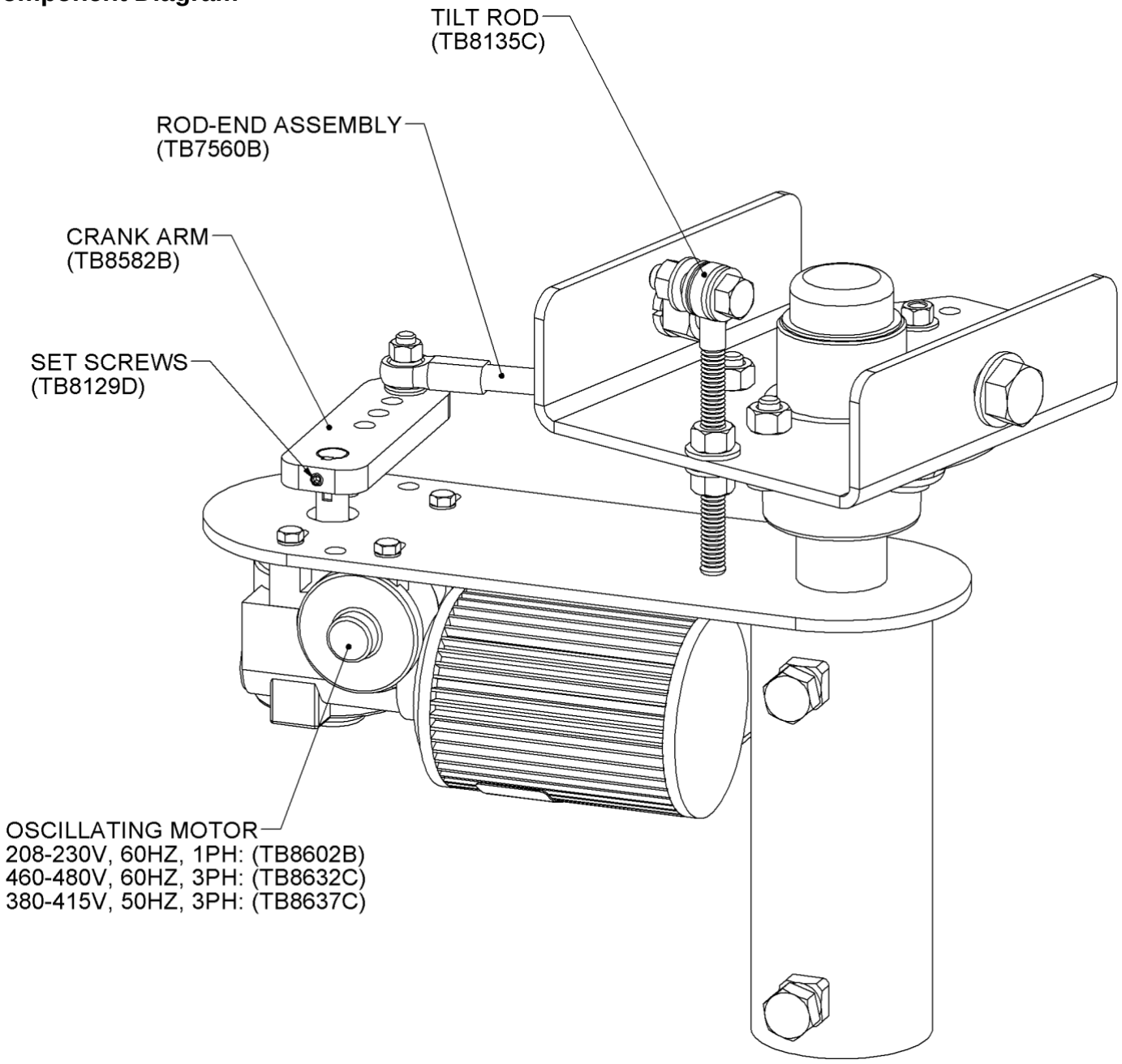

TB-38/TB-47 (Small) Oscillator Coverage Angles

Table 1: TB-38/TB-47 Oscillator Coverage

Crank Arm Position	U-Bracket Position	Oscillation Angle
1	1	38.4°
1	2	46.4°
2	1	55.8°
2	2	68.2°
3	1	74.6°
3	2	93.0°
4	1	95.6°
4	2	125.3°

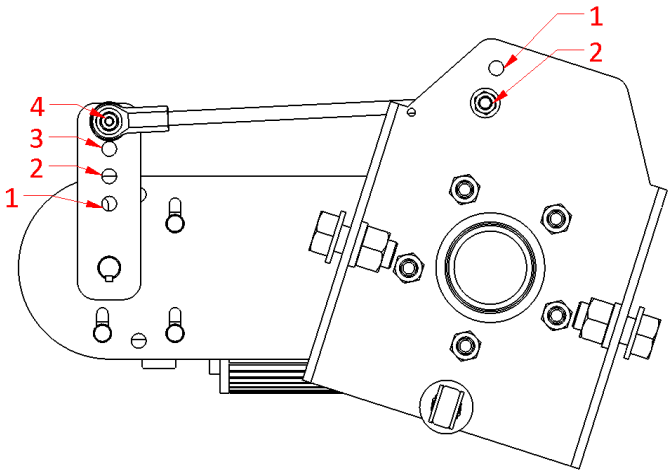

Figure 2: Oscillator connection points diagram

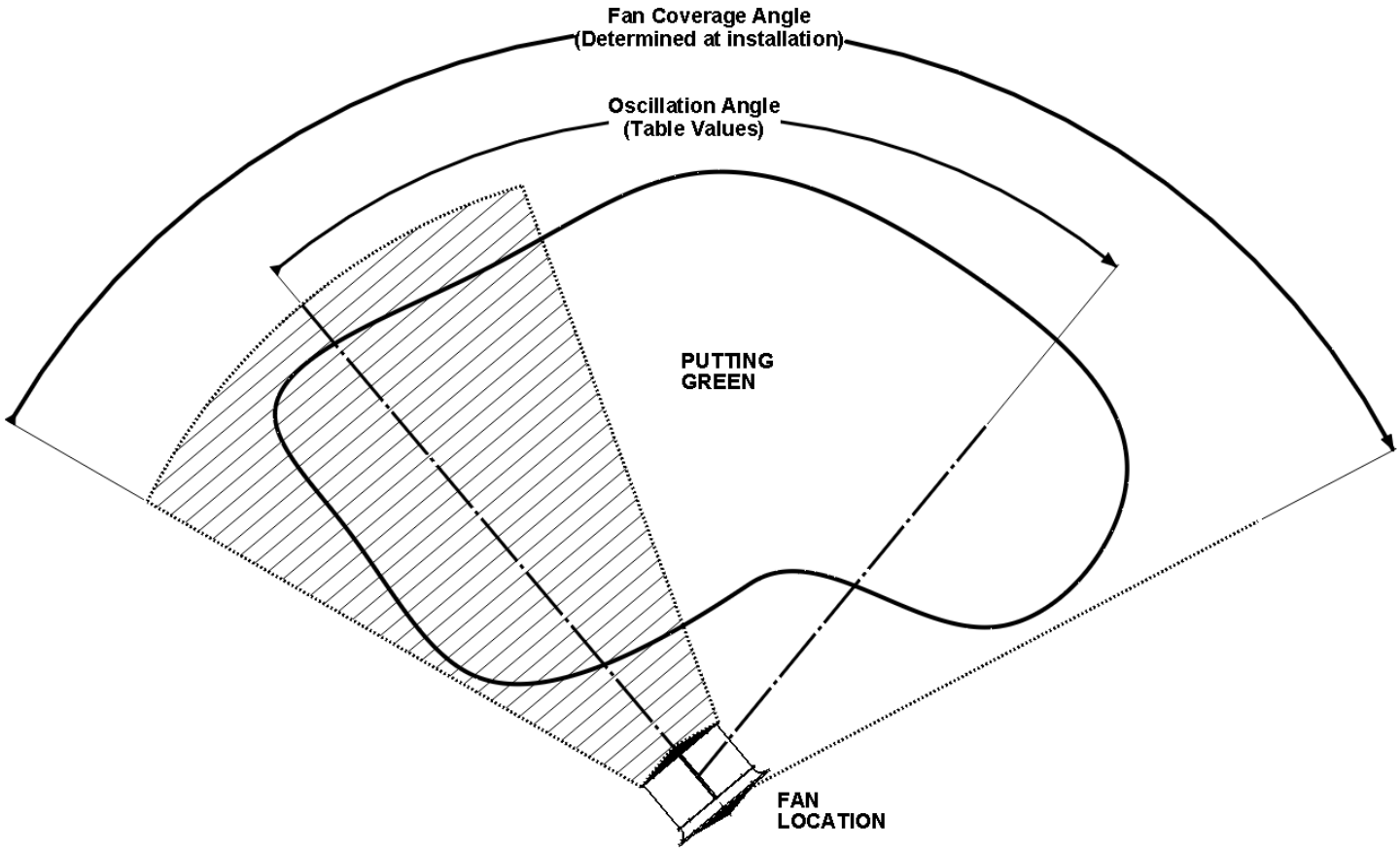

Figure 3: TB-38/TB-47 Oscillation Coverage Diagram

TB-59P, TB-59DD & TB-62G Oscillating Assembly

Component Diagram

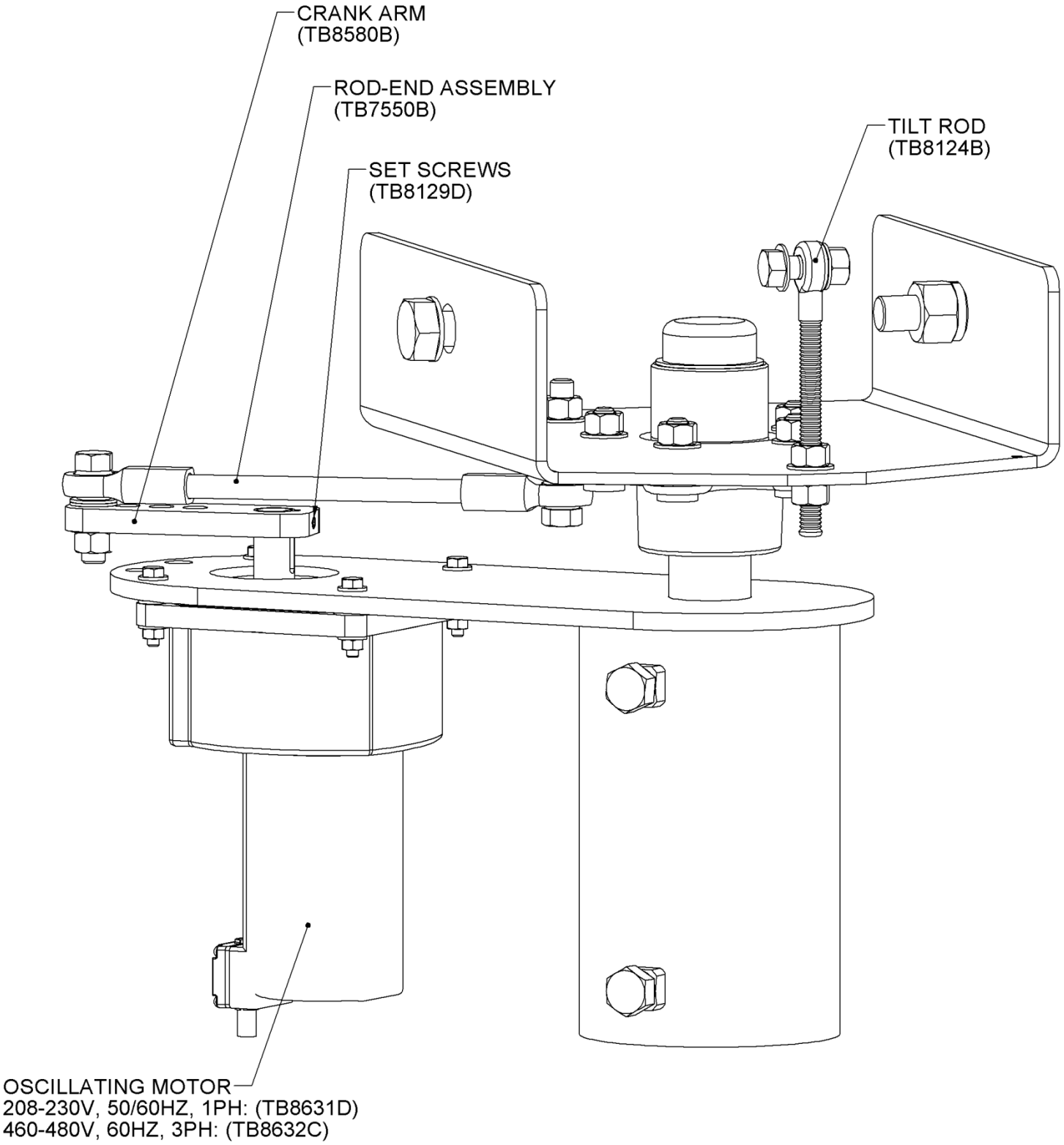

TB-59P, TB-59DD & TB-62G (Large) Oscillator Coverage Angles

Table 2: TB-38/TB-47 Oscillator Coverage

Crank Arm Position	U-Bracket Position	Coverage (Degrees)
1	1	38.4°
1	2	46.4°
2	1	55.8°
2	2	68.2°
3	1	74.6°
3	2	93.0°
4	1	95.6°
4	2	125.3°

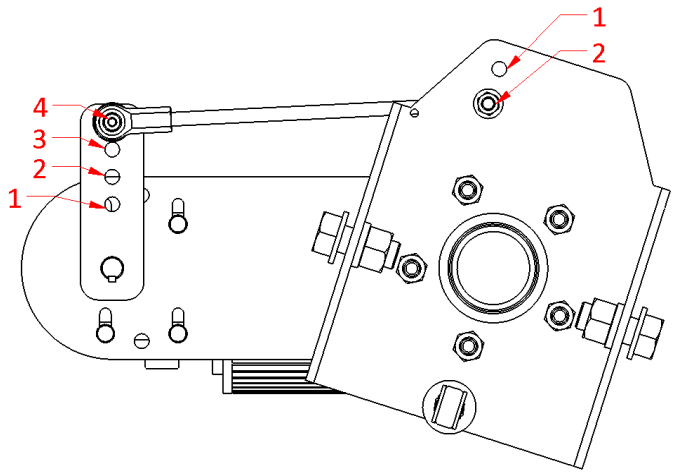

Figure 4: Oscillator connection points diagram

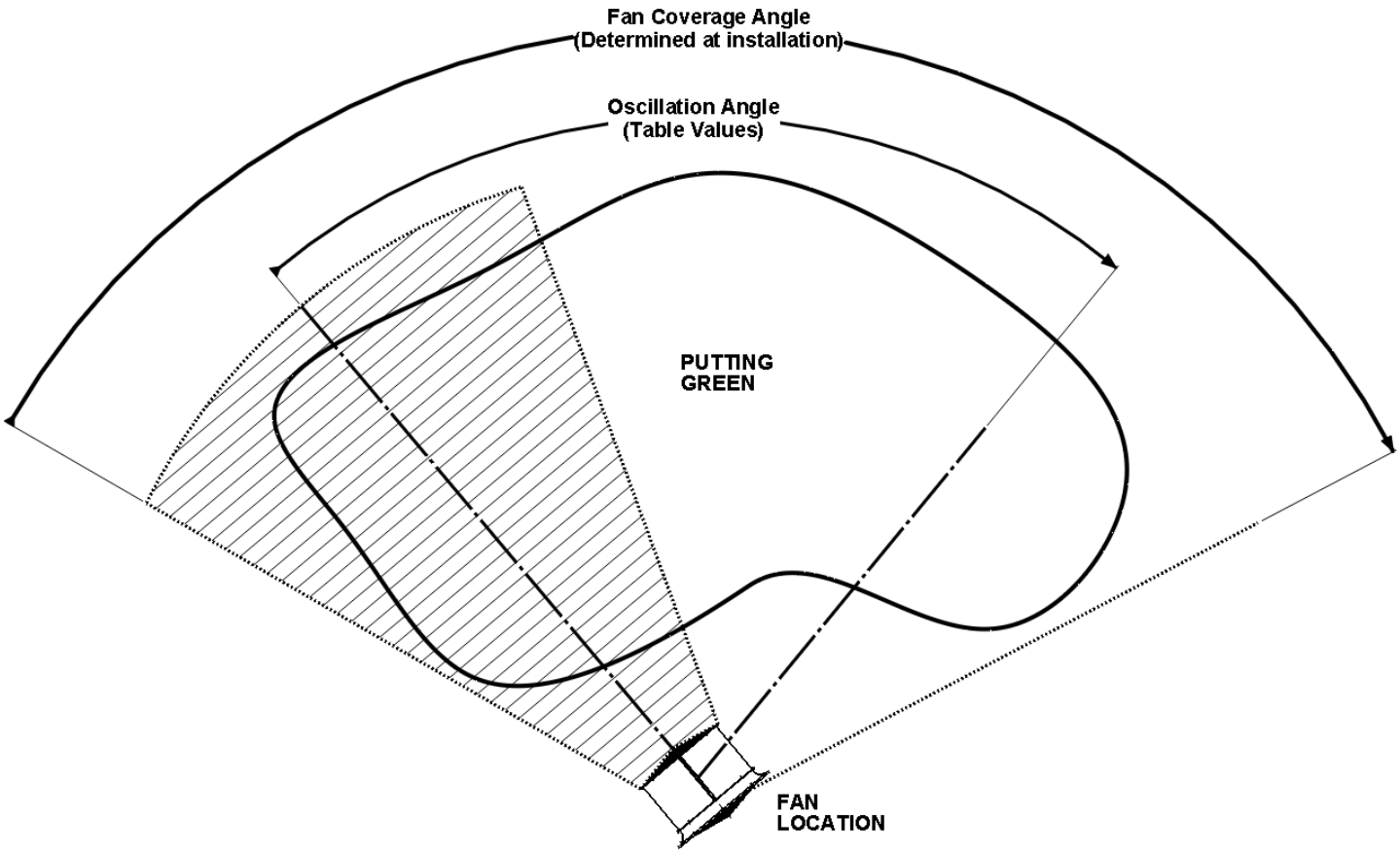

Figure 5: TB-59P, TB-59DD & TB-62G Oscillation Coverage Diagram

TB-38 (Special Order)

Specifications

TB-38 Physical Data

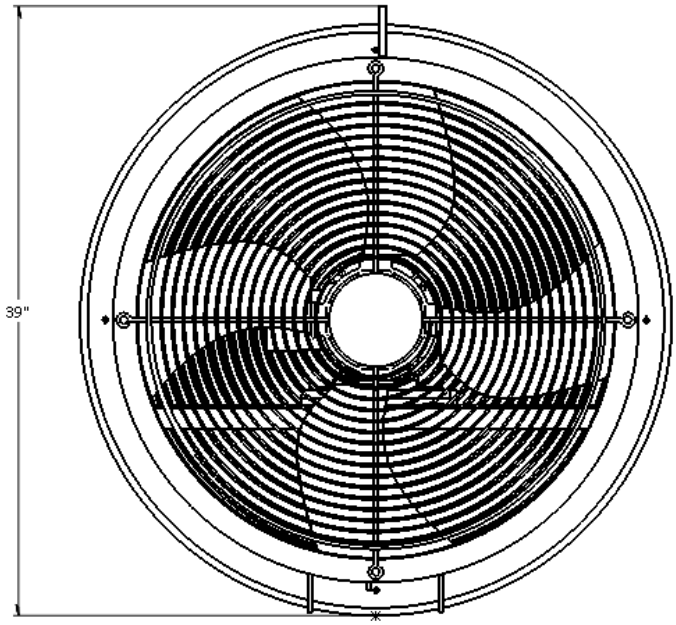

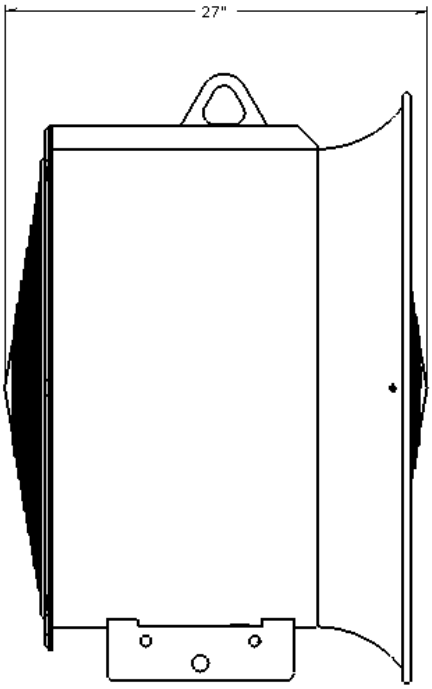

Housing Assembly Appx. Weight: 230 lbs.

TB-38 Fan Performance Data

Model	Size/Power	Throw (Ft.) @ 3 MPH	Sound dB @ 50 Ft
TB-38	38"/3HP	115	64
TB-38	38"/2HP	100	59

TB-38 Electrical Data

Model	HP	KW	Phase	Volts	Hz	Motor Rated Full Load Amps	Min. Circuit Ampacity	Max. Time Delay Fuse Rating
TB-38	2	1.5	1	208	60	10	12.5	20
TB-38	2	1.5	1	230	60	9.4	11.8	20
TB-38	2	1.5	3	208	60	7	8.8	15
TB-38	2	1.5	3	230	60	6.4	8.0	15
TB-38	2	1.5	3	460	60	3.2	4.0	5
TB-38*	2	1.5	3	190	50	7.7	9.6	15
TB-38*	2	1.5	3	200	50	7.3	9.1	15
TB-38*	2	1.5	3	380	50	3.8	4.8	10
TB-38*	2	1.5	3	400	50	3.6	4.5	10
TB-38*	2	1.5	3	415	50	3.5	4.4	10
TB-38	3	2.2	1	208	60	15.5	19.4	35
TB-38	3	2.2	1	230	60	14	17.5	30
TB-38	3	2.2	3	208	60	11	13.8	25
TB-38	3	2.2	3	230	60	10	12.5	20
TB-38	3	2.2	3	460	60	5	6.3	10
TB-38*	3	2.2	3	190	50	12.1	15.1	25
TB-38*	3	2.2	3	200	50	11.5	14.4	25
TB-38*	3	2.2	3	380	50	6.1	7.6	15
TB-38*	3	2.2	3	400	50	5.8	7.3	15
TB-38*	3	2.2	3	415	50	5.5	6.9	10

* Variable frequency drive required

TB-38 Component Diagram

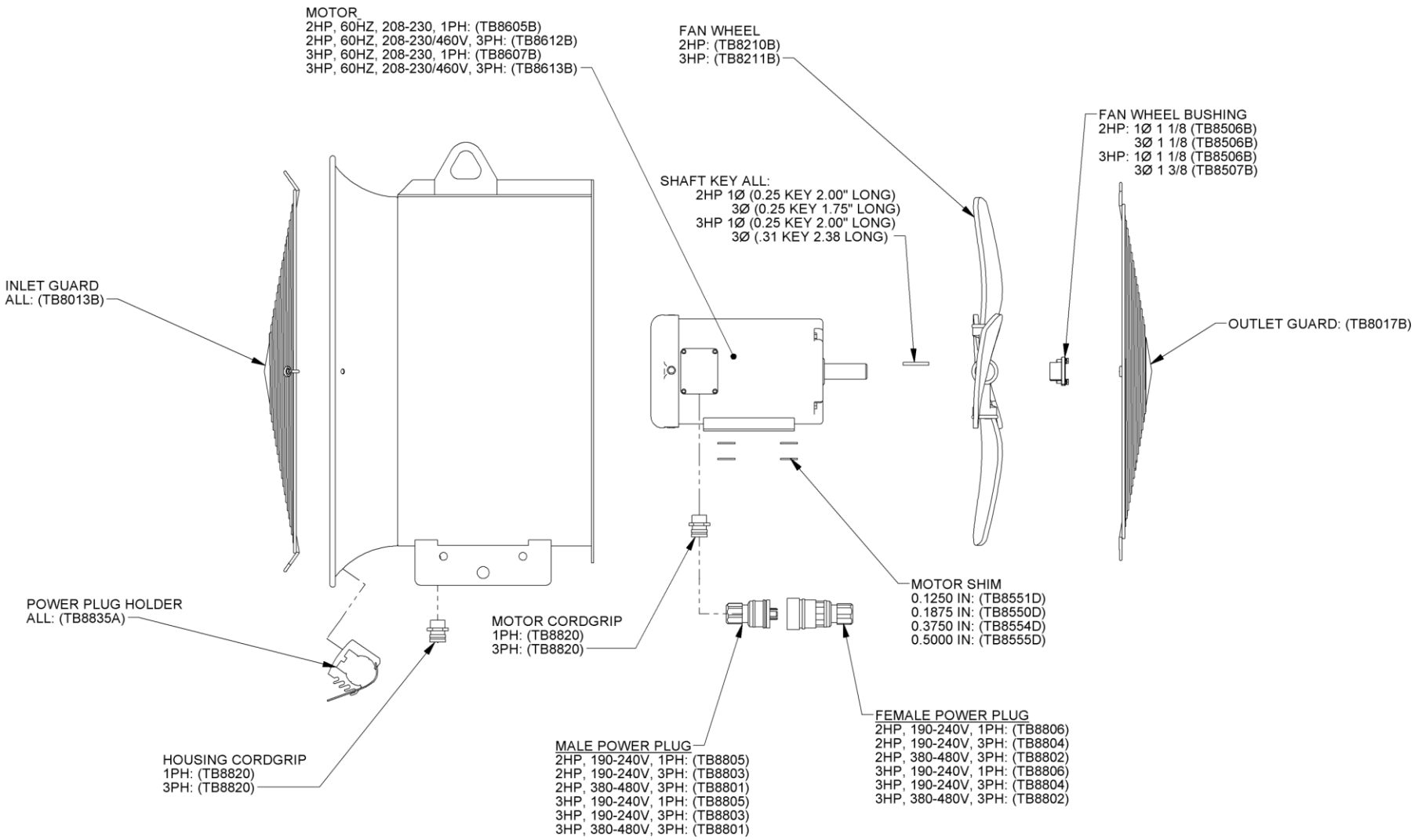

TB-47

Specifications TB-47 Physical Data

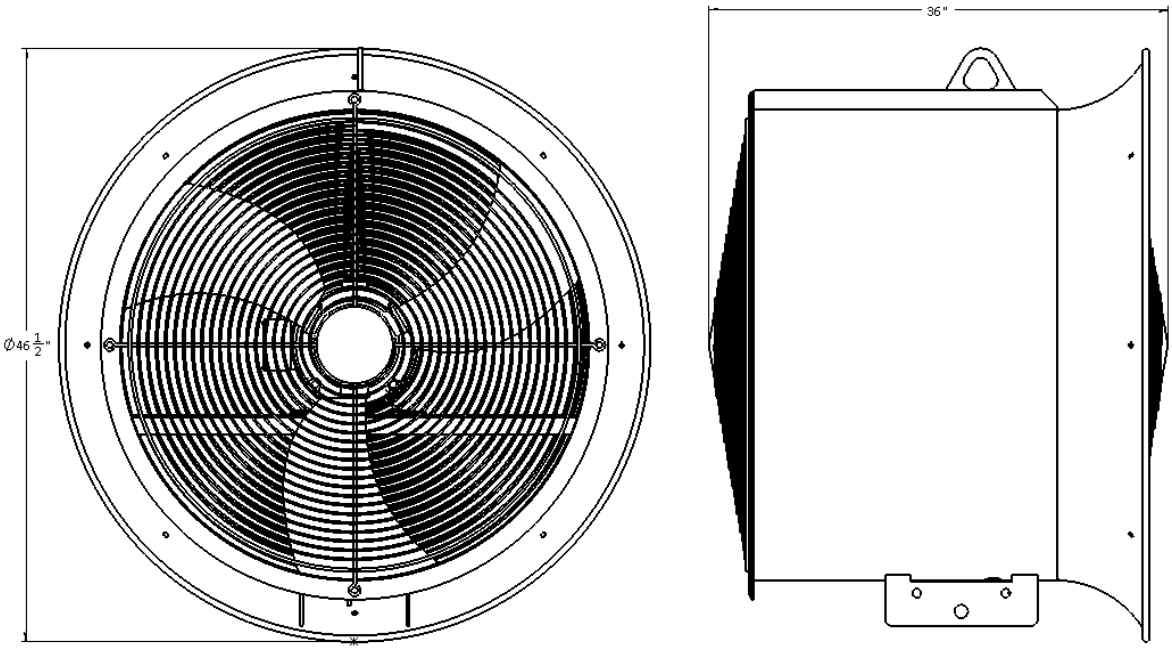

Housing Assembly Appx. Weight: 280 lbs.

TB-47 Fan Performance Data

Model	Size/Power	Throw (Ft.) @ 3 MPH	Sound dB @ 50 Ft
TB-47	47"/3HP	125	65

TB-47 Electrical Data

Model	HP	KW	Phase	Volts	Hz	Motor Rated Full Load Amps	Min. Circuit Ampacity	Max. Time Delay Fuse Rating
TB-47	3	2.2	1	208	60	15.5	19.4	35
TB-47	3	2.2	1	230	60	14	17.5	30
TB-47	3	2.2	3	208	60	11	13.8	25
TB-47	3	2.2	3	230	60	10	12.5	20
TB-47	3	2.2	3	460	60	5	6.3	10
TB-47*	3	2.2	3	190	50	12.1	15.1	25
TB-47*	3	2.2	3	200	50	11.5	14.4	25
TB-47*	3	2.2	3	380	50	6.1	7.6	15
TB-47*	3	2.2	3	400	50	5.8	7.3	15
TB-47*	3	2.2	3	415	50	5.5	6.9	10

* Variable frequency drive required

TB-47 Component Diagram

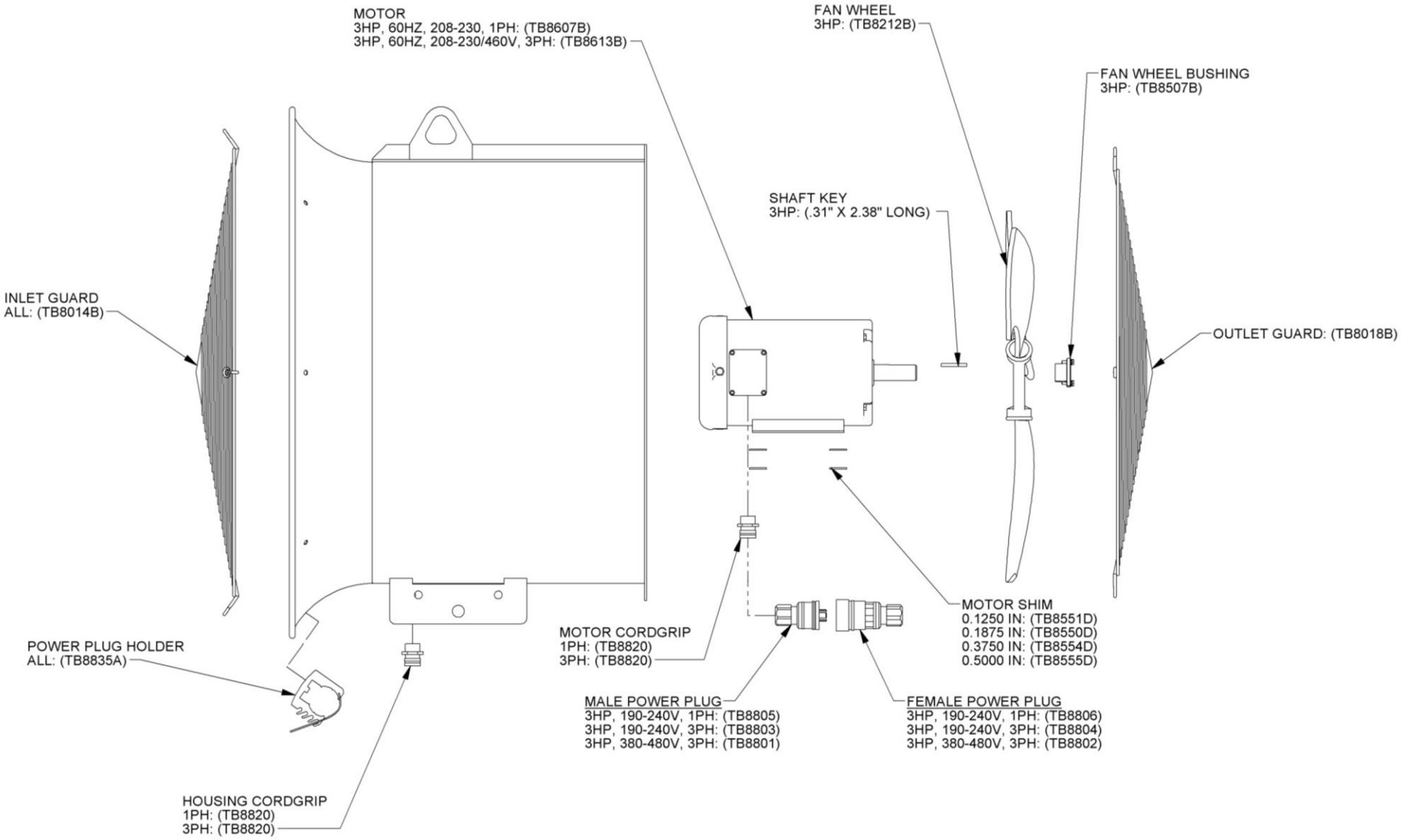

TB-59DD Direct Drive

Specifications

TB-59DD Direct Drive Physical Data

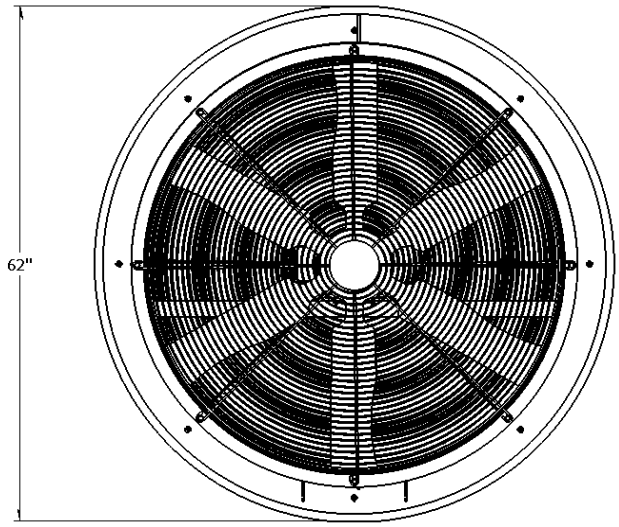

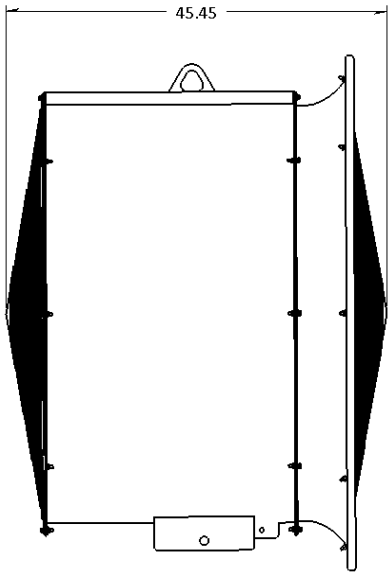

Housing Assembly Appx. Weight: 500 lbs.

TB-59DD Direct Drive Fan Performance Data

Model	Size/Power	Throw (MPH) @ 150 FT	Sound dB @ 50 Ft
TB-59DD	5HP	5.8*	60

*Average MPH measured at turf canopy on flat ground with zero ambient wind over 60 second period

TB-59DD Direct Drive Electrical Data

Model	HP	KW	Phase	Volts	Hz	Motor Rated Full Load Amps	Min. Circuit Ampacity	Max. Time Delay Fuse Rating
TB-59DD	5	3.7	1	208	60	25.4	31.8	55
TB-59DD	5	3.7	1	230	60	23	28.8	50
TB-59DD	5	3.7	3	200	60	14.5	18.1	30
TB-59DD	5	3.7	3	208	60	14	17.5	30
TB-59DD	5	3.7	3	230	60	13	16.3	30
TB-59DD	5	3.7	3	460	60	6.5	8.1	15
TB-59DD*	5	3.7	3	190	50	14.8	18.5	30
TB-59DD*	5	3.7	3	200	50	14.1	17.6	30
TB-59DD*	5	3.7	3	380	50	7.4	9.3	15
TB-59DD*	5	3.7	3	400	50	7	8.8	15
TB-59DD*	5	3.7	3	415	50	6.8	8.5	15

* Variable frequency drive required

Operation and Maintenance

All TurfBreeze gear drive fans are powered and operated at full speed prior to shipping, so they will arrive fully lubed and ready for operation. There is no initial or post break-in servicing required for the gear driven fans. Most seasoned mechanics will find this unusual, as post break-in fluid changes are typically required to remove metal shavings and particulates that are deposited as result of the machined parts initially wearing-in together. However, due to the quality of materials and precision machining of the gearboxes used in the TurfBreeze fans, the components generate little or no contamination even during initial use. Therefore, it is recommended that the lubricant **NOT** be changed prior to 20,000 hours of operation. Premature servicing unnecessarily increases the risk of debris ingress and fluid contamination, and provides zero benefit with respect to service life.

Between fluid change intervals periodically inspect the bottom of the front seal and rear adapter areas of the gearbox for signs of oil leakage. Some “wetness” may occur over time, but should never accumulate to the point where it drips from the box. Periodically inspect the fluid level using the sight glass on the front of the gearbox.

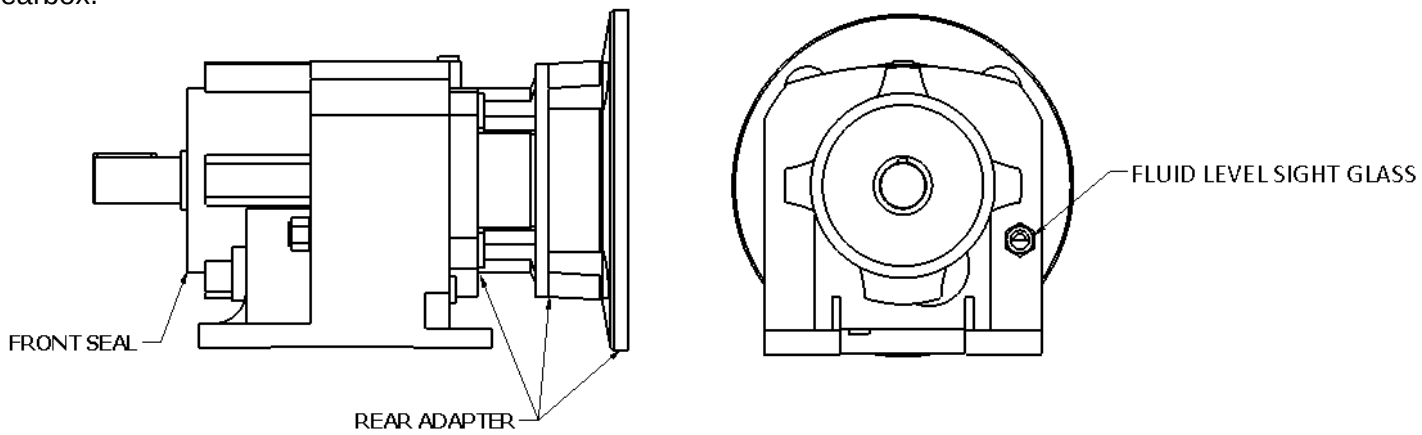

If fluid must be added it is recommended to completely drain the gearbox, and refill using exactly 0.95 quarts (0.90 liters) of Mobil SHC Cibus 220 (or exact equivalent) to avoid overfilling. Both overfilling and under filling can result in gearbox failure. If for any reason the fluid cannot be fully drained and replaced follow the procedure below for adding to existing fluid.

1) Completely level the gearbox using a bubble level (both front to back, and side to side)
2) Remove the sight glass
3) Fill the box until the fluid begins to run out
4) Reinstall the sight glass, and reposition fan

Keep in mind that too much fluid can be just as harmful as to little. Also remember that under normal operating conditions the fluid should NOT be changed prior to 20,000 hours of operation.

TB-59DD Direct Drive Component Diagram

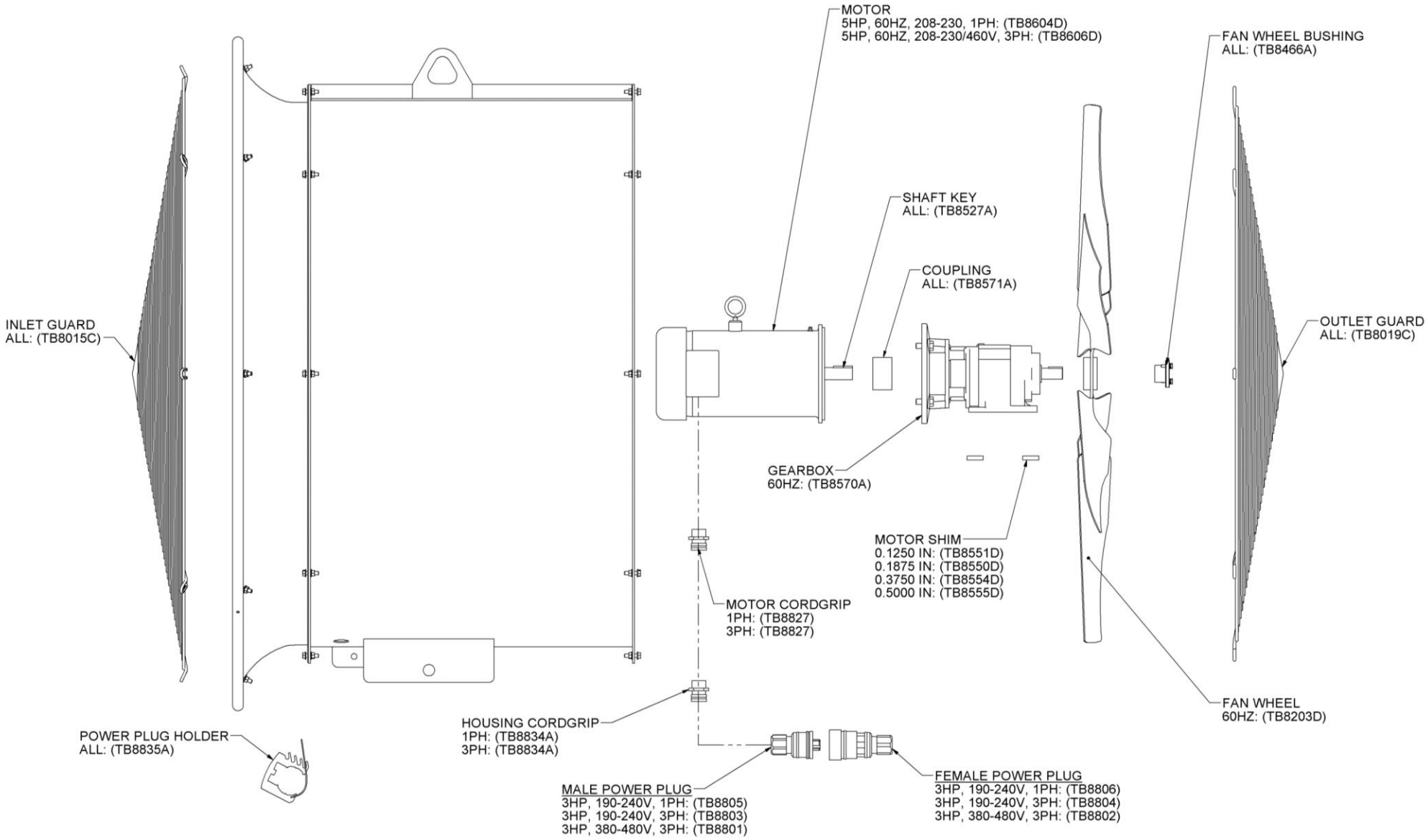

TB-59P Premium

Specifications

TB-59P Premium Physical Data

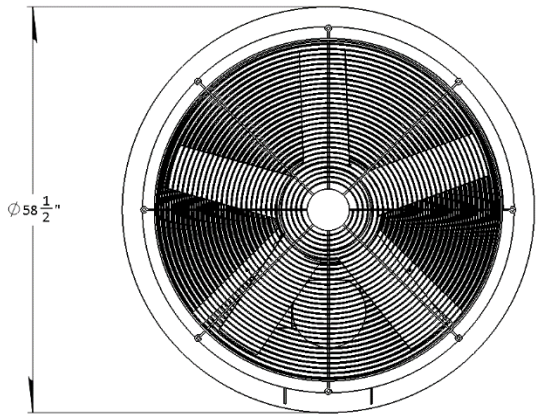

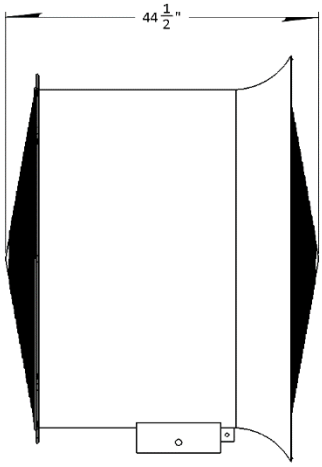

Housing Assembly Appx. Weight: 500 lbs.

TB-59P Premium Fan Performance Data

Model	Size/Power	Throw (MPH) @ 150 FT	Sound dB @ 50 Ft
TB-59P Prem.*	5HP	5.4**	60

*Performance and electrical data based on standard pulley configuration. High performance pulley package will increase flow, throw, sound, and average power consumption.
**Average MPH measured at turf canopy on flat ground with zero ambient wind over 60 second period

TB-59P Premium Fan Electrical Data

Model	HP	KW	Phase	Volts	Hz	Motor Rated Full Load Amps	Min. Circuit Ampacity	Max. Time Delay Fuse Rating
TB-59P Premium	5	3.7	1	208	60	22	27.5	50
TB-59P Premium	5	3.7	1	230	60	20.5	25.6	45
TB-59P Premium	5	3.7	3	200	60	14.5	18.1	30
TB-59P Premium	5	3.7	3	208	60	13.9	17.4	30
TB-59P Premium	5	3.7	3	230	60	13.4	16.8	30
TB-59P Premium	5	3.7	3	460	60	6.7	8.4	15
TB-59P Premium	5	3.7	3	190	50	24.8	31.0	55
TB-59P Premium	5	3.7	3	200	50	23.6	29.5	50
TB-59P Premium	5	3.7	3	380	50	12.4	15.5	25
TB-59P Premium	5	3.7	3	400	50	11.8	14.8	25
TB-59P Premium	5	3.7	3	415	50	11.4	14.3	25

Maintenance

Belt Tensioning

The proper tension for operating a V-belt drive is the lowest tension at which the belts will not slip at peak load conditions. The belts are adjusted by raising or lowering the motor pivot plate (see Figure 6 for details). For tensioning, the proper belt deflection half-way between sheave centers is 1/64 of the belt span. For TurfBreeze Premium fans the belt deflection should be between 1/4" and 1/2" using with 5 pounds pressure applied at the mid-point of the free belt span (deflection and mid-point depicted in Figure 7). A v-belt tensioner like the one shown in Figure 8 is required to accurately measure pressure, and deflection.

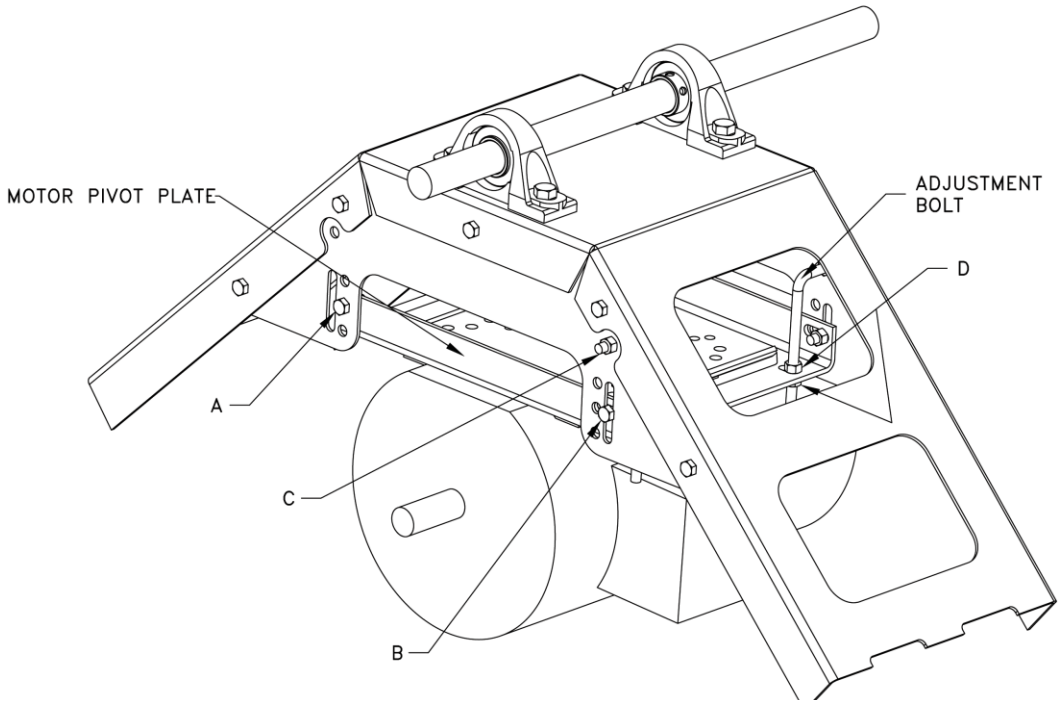

Figure 6: Premium Belt Adjustment Components

Motor pivot plate adjustment (belt tensioning) procedure:

Follow the following steps:

1.Loosen the fasteners A, B, & C on both sides of the drive frame.

2.Loosen and adjust jam nuts (D) on both adjustment bolts equally until proper belt tension has been obtained.

3.Tighten the jam nuts (D).

4.Tighten the fasteners A, B, & C on both sides of drive frame.

TB-59P Premium

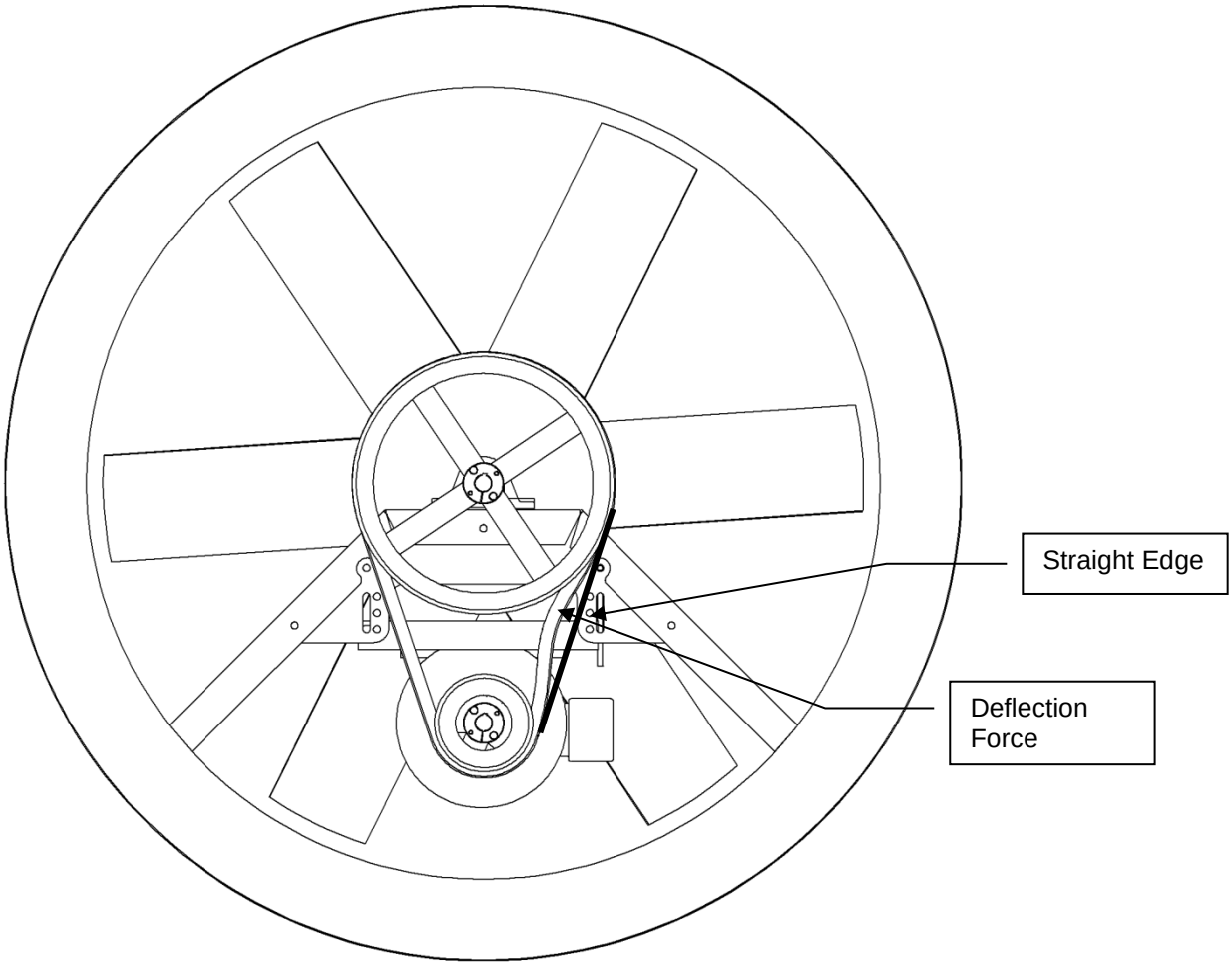

Figure 7: **Premium V-belt deflection diagram**

Figure 8: Belt Tensioner, MSC Part#:35437300, www.mscdirect.com

TB-59P Premium Component Diagram

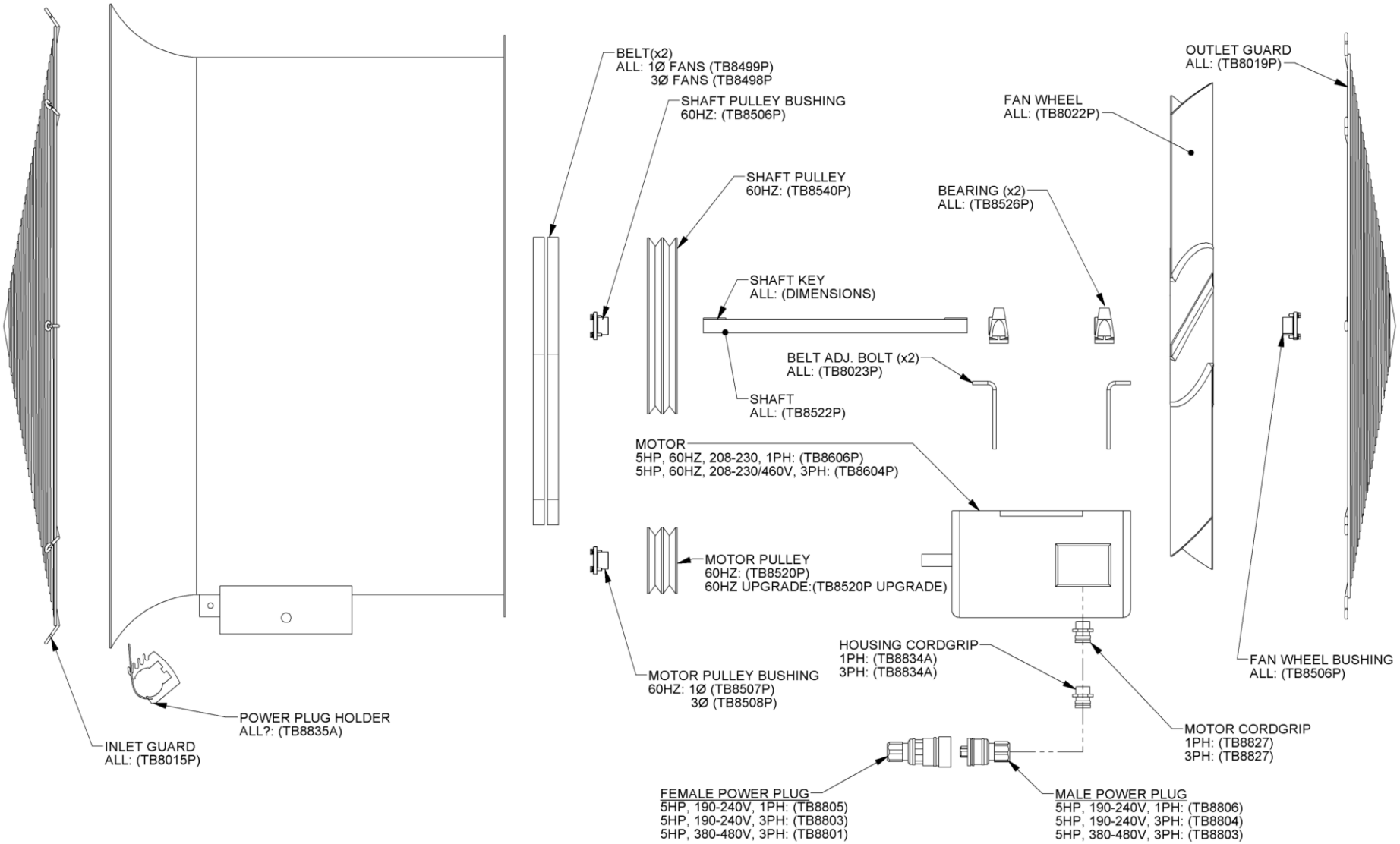

TB-62G Gas

Specifications

TB-62G Physical Data

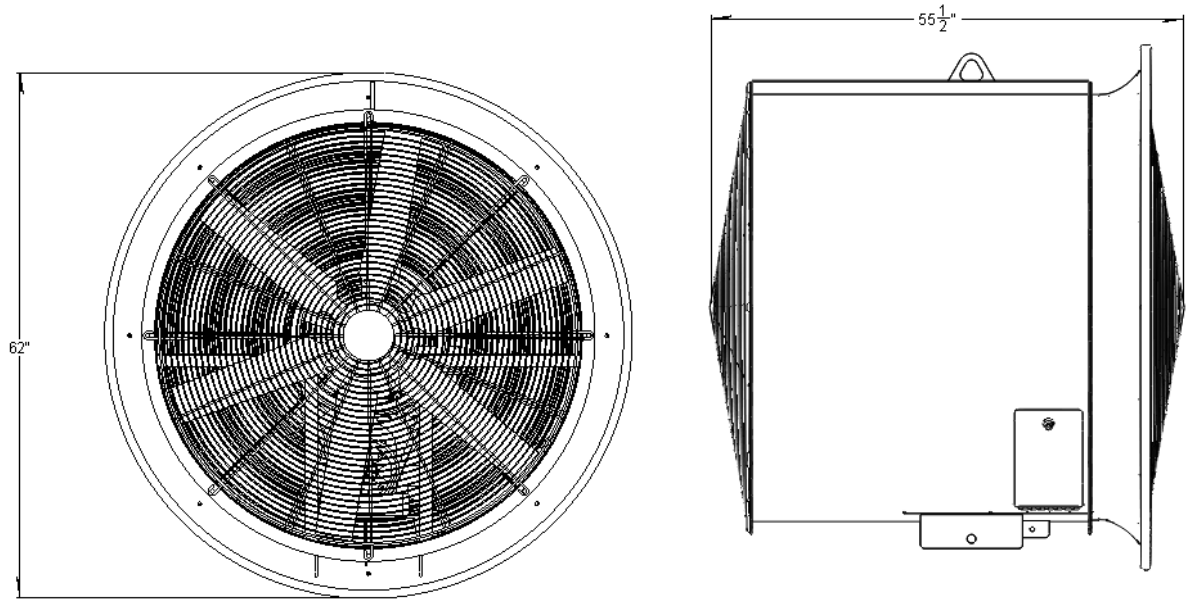

Housing Assembly Appx. Weight: 620 lbs.

TB-62G Fan Performance Data

Model	Size/Power	Throw (MPH) @ 150 FT	Sound dB @ 50 Ft
TB-62G	62"/16HP	6	77

Maintenance

Gas Fan Belts

TurfBreeze gas fans utilize two high quality “link style” v-belts. These belts in theory operate like traditional v-belts, but provide improved service life, adjustability, and ease of installation. Fans are delivered with the belts properly tensioned and ready for use. However, the tension should be monitored closely for the first 72 hours of operation as the break-in. If at any point during the life of the fan the belts appear to have significantly more movement or if the fan vibration increases notably, then the belts need to be tightened or replaced using the corresponding procedure below. **Always replace the belts as a pair.**

Re-Tensioning Procedure:

1) Removal
    a. Roll the outer belt off the larger pulley towards the fan blades.
    b. Roll the inner belt off the larger pulley towards the engine.
    c. Remove the belts from the fan housing.
2) Disassembly & Link removal
    a. Hold belt upside down. Bend back as far as possible; hold with one hand. Twist one tab 90 degrees parallel with slot.
    b. Pull the end of link over tab.
    c. Rotate the belt end with tab 90 degrees.
    d. Pull the belt end through two links.
    e. Remove (1) link from the belt.
3) Assembly
    a. Hold the belt with tabs pointing outward.
    b. Place the end tab through two links at once.
    c. Flex the belt further and insert second tab through end link by twisting tab with thumb.
    d. Ensure the tab returns to position across belt. Reverse belt so tabs run inside.
4) Installation
    a. Turn the belt with tabs to the inside before installing.
    b. Determine the direction of drive rotation.
    c. Make sure that both belts have the exact same number of links.
    d. Align the belt directional arrows with drive rotation.
    e. Loop the one belt over larger pulley such that it is hanging on the shaft between the pulley and pillow block bearing.
    f. Fit the second belt in the groove of smaller pulley closest to the engine.
    g. Roll the belt onto larger pulley from the motor side, turning the drive slowly. Belt may seem very tight; this is ok; DO NOT JOG MOTOR.
    h. Check to see that all the tabs are still in their correct position and are not twisted out of alignment.
    i. Go back and to the first belt and fit it in the second groove on the smaller pulley.
    j. Roll the second belt onto larger pulley from the fan blade side, turning the drive slowly. Belt may seem very tight; this is ok; DO NOT JOG MOTOR.
    k. Double check the belt directional arrows, tab alignment, and number of links in both belts.

BE SURE TO KEEP THE MOTOR PULLEY AND FAN SHAFT PULLEYS VERTICALLY IN LINE WITH ONE ANOTHER if at any time the motor is loosened or removed. Refer to the Turf Breeze Manual for pulley alignment notes and illustrations in the V-belt tensioning section.

Inspect belts yearly for cracks, dry-rotting, or any other signs of excessive wear and replace as needed. ***Always replace the belts as a pair***.

New Belt Procedure:

1) Measuring
    a. Pull the belt tight around pulleys to check hand tight length, overlapping the last two tabs with two holes in matching links as shown. Count the number of links and remove one link for every 24 of 3L, O/Z, A/4L, and B/5L sections, and one link for every 20 of C and D sections. This gives the correct installed belt length and will ensure optimum belt tension when running. Note: Every tenth link is designated with an arrow (➞). For multiple belt drives, ensure that each belt has the same number of links.
2) Disassembly
    a. Hold the belt upside down. Bend the belt back as far as possible; hold with one hand. Twist one tab 90 degrees parallel with slot.
    b. Pull the end of link over tab.
    c. Rotate the belt end with tab 90 degrees.
    d. Pull the belt end through two links.
3) Assembly
    a. Hold the belt with tabs pointing outward.
    b. Place the end tab through two links at once.
    c. Flex the belt further and insert second tab through end link by twisting tab with thumb.
    d. Ensure the tab returns to position across belt. Reverse belt so tabs run inside.
4) Installation
    a. Turn the belt with tabs to the inside before installing.
    b. Determine the direction of drive rotation.
    c. Make sure that both belts have the exact same number of links.
    d. Align the belt directional arrows with drive rotation.
    e. Loop one belt over the larger pulley such that it is hanging on the shaft between the pulley and pillow block bearing.
    f. Fit the second belt in the groove of smaller pulley closest to the engine.
    g. Roll the belt onto larger pulley from the motor side, turning the drive slowly. The belt may seem very tight; this is ok; DO NOT JOG MOTOR.
    h. Check to see that all the tabs are still in their correct position and are not twisted out of alignment.
    i. Go back and to the first belt and fit it in the second groove on the smaller pulley.
    j. Roll the second belt onto larger pulley from the fan blade side, turning the drive slowly. Belt may seem very tight; this is ok; DO NOT JOG MOTOR.
    k. Double check the belt directional arrows, tab alignment, and number of links in both belts.

BE SURE TO KEEP THE MOTOR PULLEY AND FAN SHAFT PULLEYS VERTICALLY IN LINE WITH ONE ANOTHER if at any time the motor is loosened or removed. Refer to the Turf Breeze Manual for pulley alignment notes and illustrations in the V-belt tensioning section.

Inspect belts yearly for cracks, dry-rotting, or any other signs of excessive wear and replace as needed. ***Always replace the belts as a pair***.

Engine Maintenance Schedule (Briggs & Stratton excerpt)

MAINTENANCE & ADJUSTMENT SCHEDULE

The following maintenance schedule is a general guide. See the Engine Operating & Maintenance Instructions for details on specific engine models.

Maintenance Schedule	8 Hours or Daily	25 Hours or Every Season	50 Hours or Every Season	100 Hours or Every Season	500 Hours
Check oil level *	■				
Change oil			■ Note #1		
Change oil filter				■	
Clean/Replace air filter pre-cleaner		■ Note #2			
Clean/Replace air filter cartridge				■ Note #2	
Clean cooling system				■ Note #2	
Inspect/Clean spark arrester (if used)			■		
Replace or clean spark plugs				■	
Replace in-line fuel filter				■	
Remove combustion chamber deposits					■

⚠ Change oil after the first 5 to 8 hours of operation (break-in period), then every **50 hours** of every season

NOTE: #1 – Change oil every 25 hours when operating under heavy loads or high temperatures.

NOTE: #2 – Clean more often under dusty conditions or when airborne debris is present. Replace air cleaner parts when dirty.

Oil Recommendations (Briggs & Stratton excerpt)

Oil has four purposes. It cools, cleans, seals and lubricates. During normal operation, small particles of metal from the cylinder walls, pistons, bearings and combustion deposits contaminate the oil. Dust particles from the air also contaminate the oil, forming an abrasive mixture that can wear internal engine parts if the oil is not changed regularly. Fresh oil assists in cooling. Old oil gradually thickens and loses its cooling ability and its lubricating qualities.

Briggs & Stratton OHV V-Twin engines are lubricated with a gear-driven oil pump. Use a high-quality detergent oil classified "For Service **SJ or HIGHER**" such as Briggs & Stratton 30 weight oil part **#100005** or #**100028**. Detergent oils keep the engine cleaner and retard the formation of gum and varnish deposits. Do not use any additional additives with recommended oils.

Air cooled engines run hotter than automotive engines. Use of multi-viscosity oils (10W-30, etc.) in ambient temperatures above 40° F (4° C) will result in high oil consumption. If multi-viscosity oil is used, check oil level more frequently to prevent any possible engine damage due to lack of lubrication.

Use of SAE 30 oil in ambient temperatures below 40° F (4° C) will result in hard starting and possible engine damage due to inadequate lubrication.

Synthetic oil meeting ILSAV GF-2, API certification mark and API service symbol with "SJ/CF ENERGY CONSERVING" rating or higher is an acceptable oil at all temperatures.

NOTE: Use of synthetic oil does not alter recommended oil change intervals. Oil change intervals take into consideration the fuel, metal, and other deposit contamination rates in addition to the viscous properties of the oil.

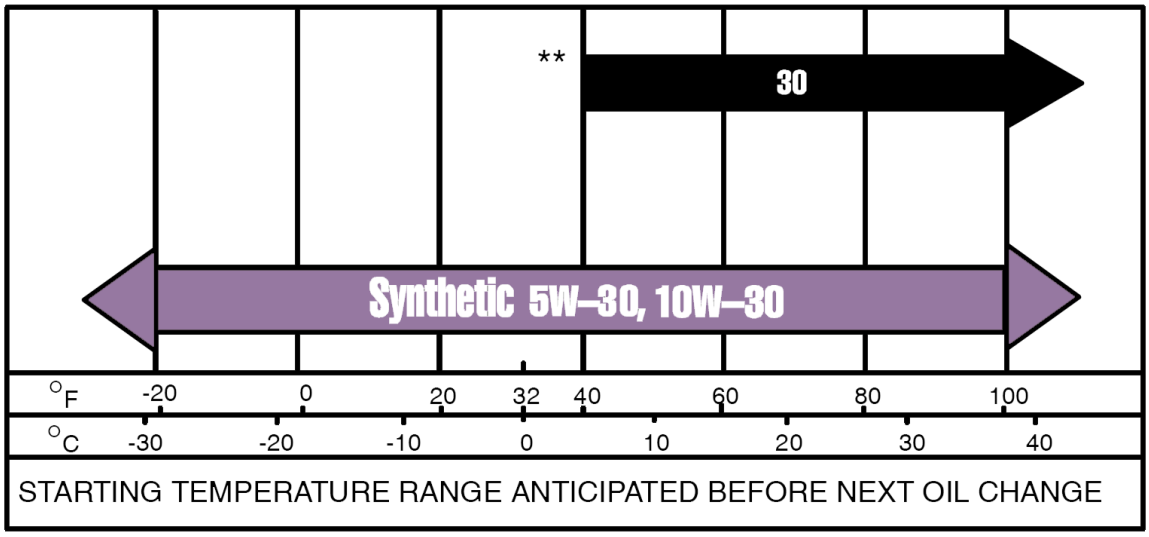

Figure 9: Oil Selection Chart

Fuel Recommendations (Briggs & Stratton excerpt)

• Use clean, fresh regular unleaded gasoline with a minimum of 85 octane. Fresh fuel prevents gum from forming in the fuel system or on essential carburetor parts. Purchase fuel in a quantity that can be used within 30 days.

• Do not use gasoline containing Methanol.

• Do not mix oil with gasoline.

• For engine protection use Briggs & Stratton Fuel Stabilizer #5041 or single use pouch #5058 available from your Authorized Briggs & Stratton Dealer.

CAUTION: Some fuel, called “oxygenated” or “reformulated” gasoline, is gasoline blended with alcohol or ether. Excessive amounts of these blends can damage the fuel system or cause performance problems. If any undesirable operating symptoms occur, use gasoline with a lower percentage of alcohol or ether.

Inline Fuel Filter (Briggs & Stratton excerpt)

Service Replace inline fuel filter yearly or every 100 hours, whichever occurs first. Replace filter if dirt or water are present.

TB-62G Gas Component Diagram

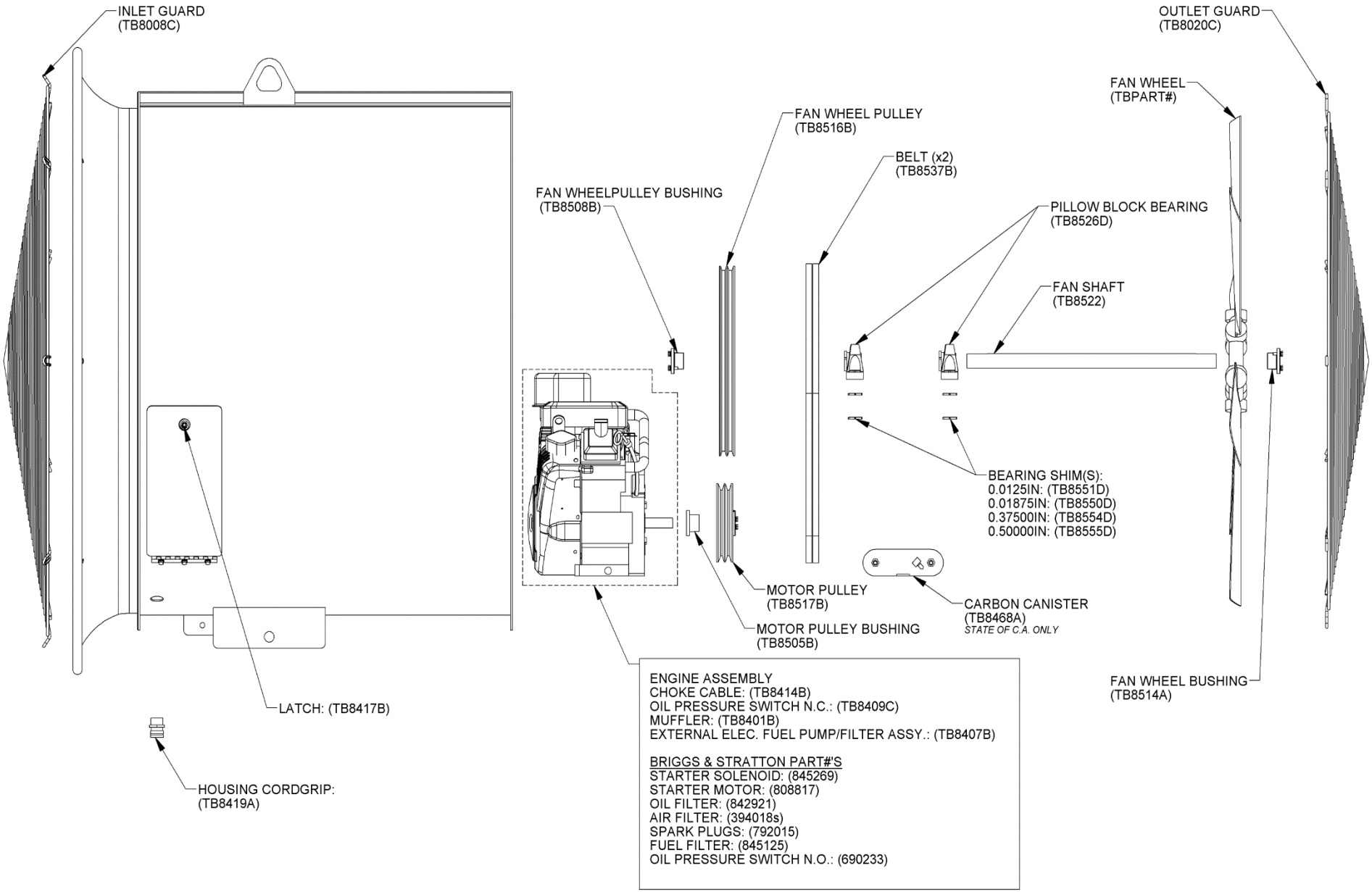

TB-62G Gas Electrical Schematic

NOTE: Except for the ring terminals, which connect directly to the battery posts, all the other connectors have been selected and oriented such that they can only be connected to the correct termination point. If a wire terminal on an individual wire doesn't match a connection point, then the wire doesn't go there. Care must be taken here to avoid reversing the polarity if any connectors are changed after initial delivery.

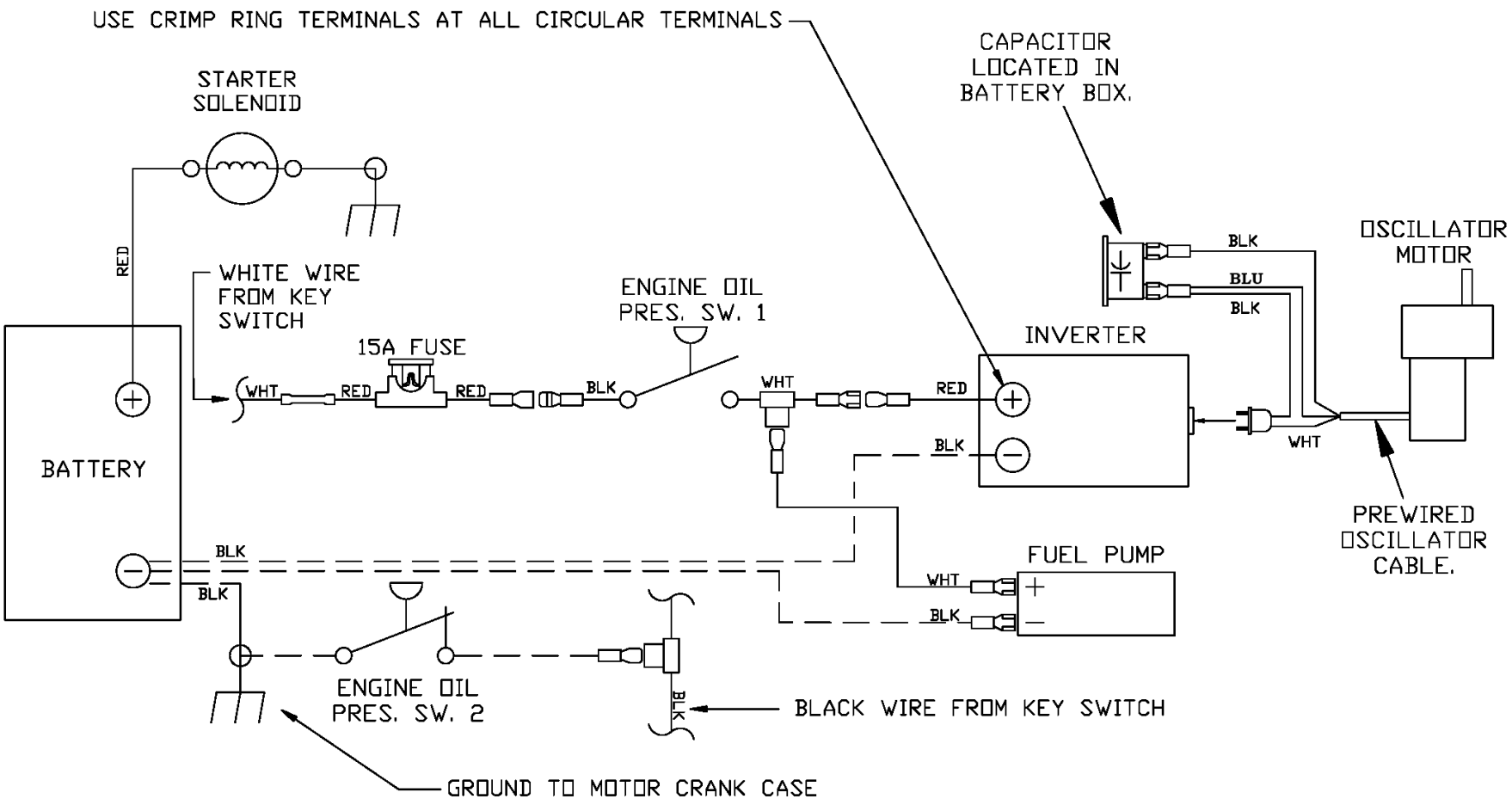

Standard Control Package

Application Notes and Instructions

The standard base TurfBreeze control packages include a lockable motor rated disconnect switch, irrigation control interface relay, on/off/auto mode selector switch, control fuses, magnetic motor contactor, and bimetallic phase sensitive thermal overload for maximum protection. The circuit design, components, and wiring are all specified to meet or exceed National Electric Code (NEC) safety standards, and pass UL inspection.

The irrigation relay provided has a 24v AC coil that will interface with most common 24v irrigation solenoid circuits. This feature allows the fan to be operated remotely just like a sprinkler head using the irrigation control system already in place.

Single Phase Control Package Component Diagram

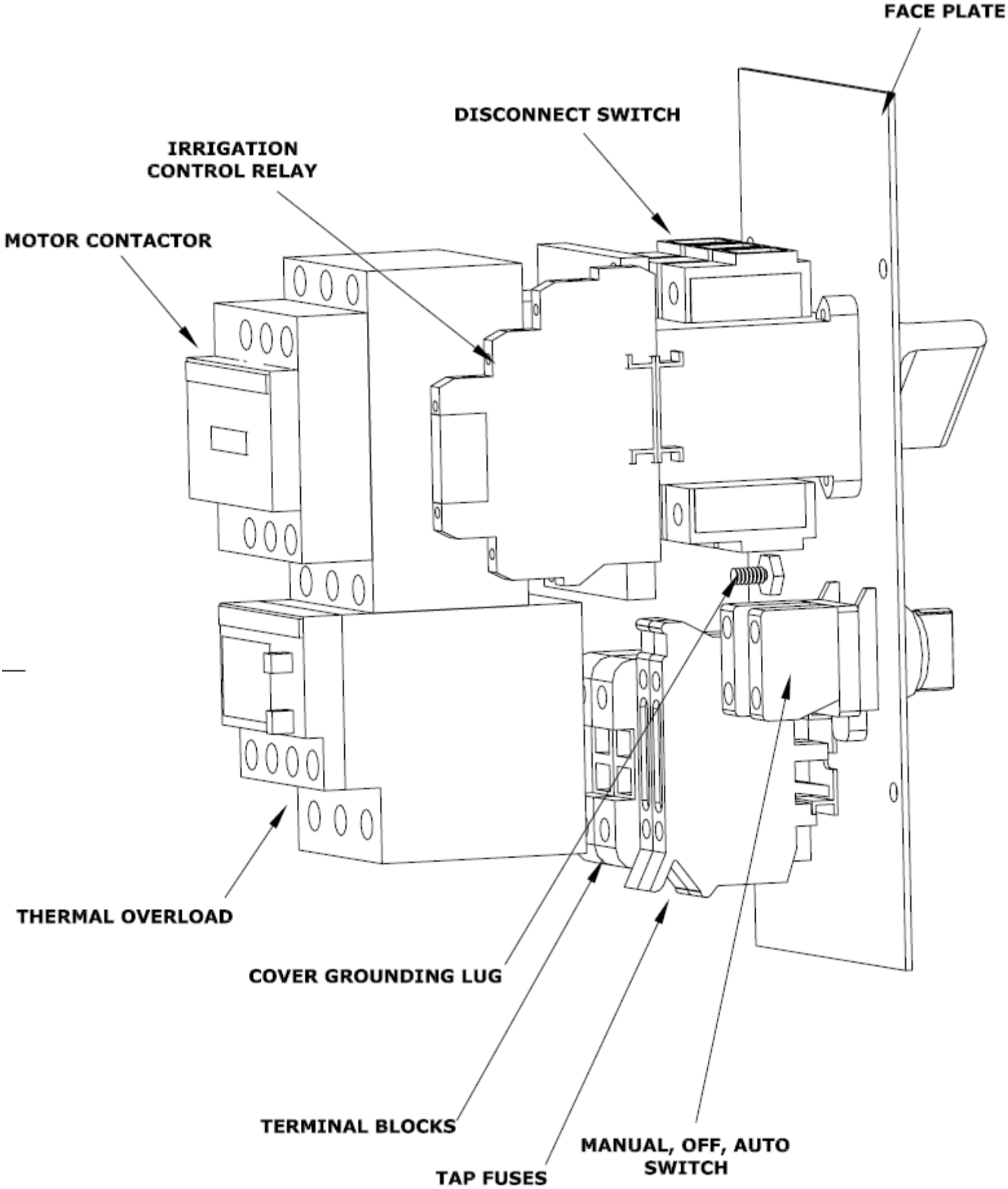

Single Phase Control Package Electrical Schematics

190-240v, Single Phase, Standard

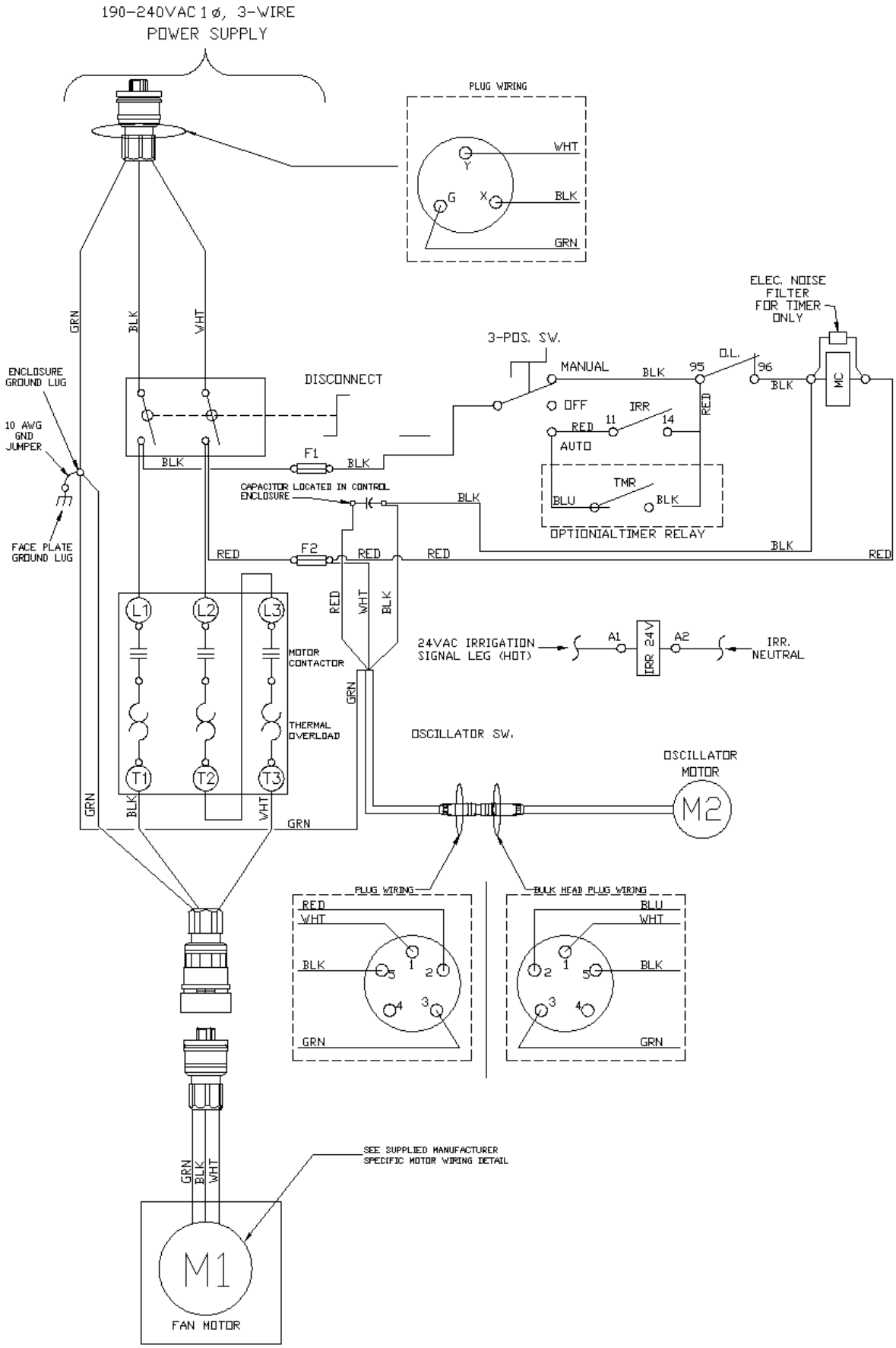

Three Phase Control Package Component Diagram

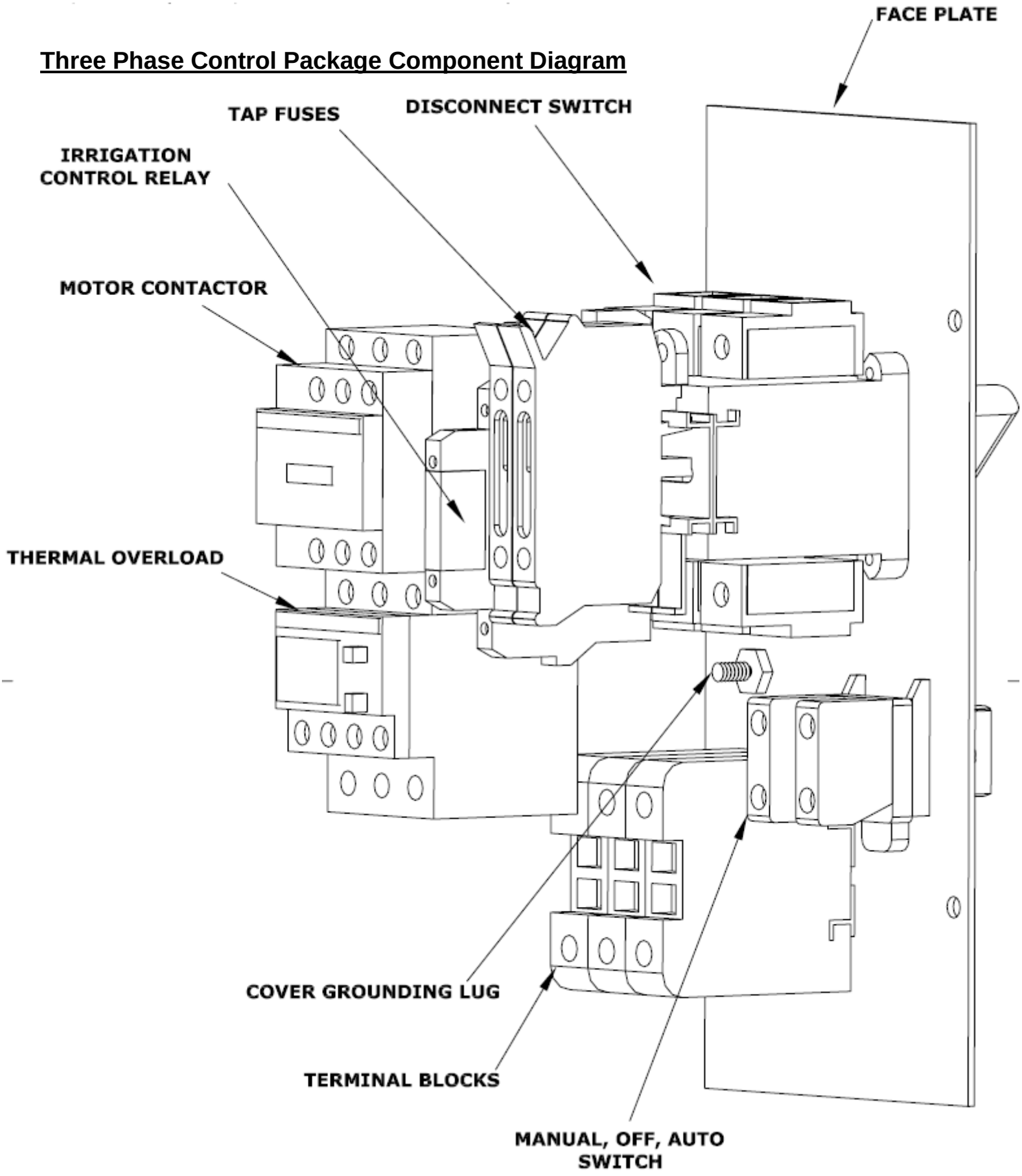

Three Phase Control Package Electrical Schematics

190-240v, Three Phase

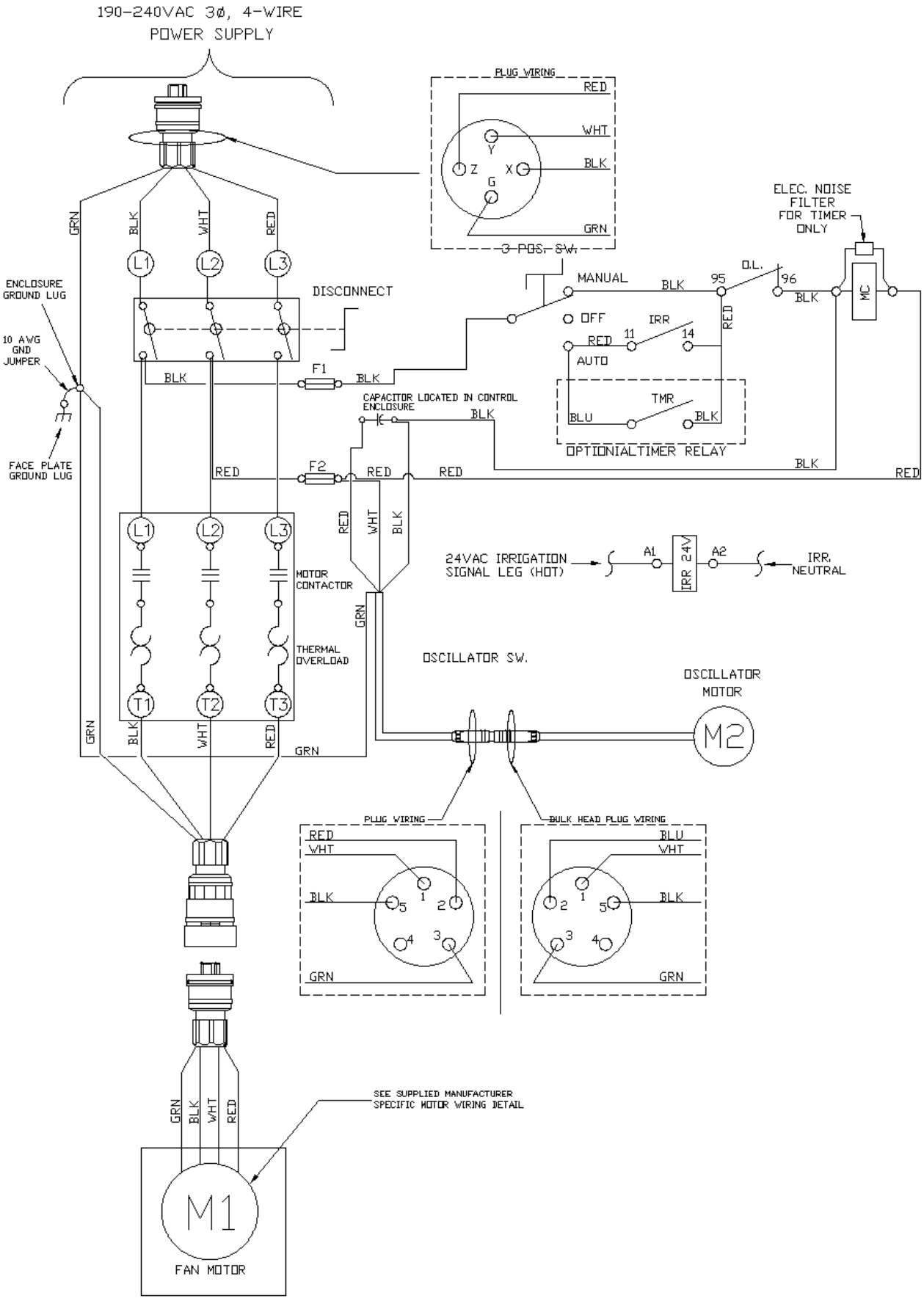

460-480v, Three Phase

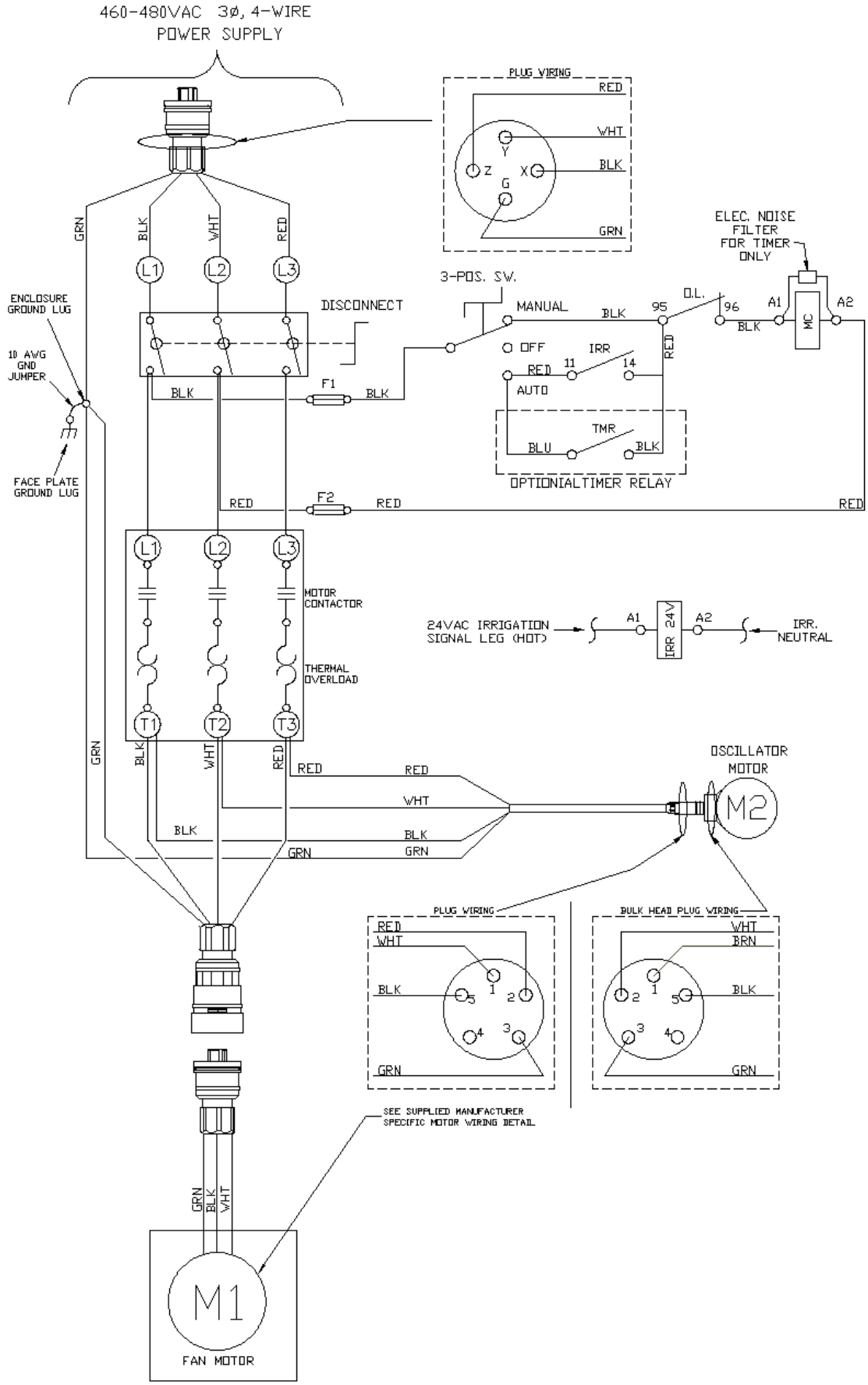

Variable Frequency Drive Control Package Option

Application Notes and Instructions

Figure 10: VFD Touchpad Detail

The variable frequency drive (VFD) is a microprocessor based motor controller that provides comprehensive electrical protection, and levels of control and flexibility that isn't possible with older motor contactor and thermal overload combination technology. This flexibility and control is derived from the way the drives function. Unlike motor contactors the VFD does not simply connect the supply power directly to the motor like a light switch. Instead it internally converts the incoming AC power to DC power, and then uses the precision microprocessor controls to convert the DC back into AC. When it does this it can generate whatever wave form and frequency that is desired to be sent to the motor. This allows the motor to be ramped up to speed gradually eliminating high inrush currents at start up, provides full control over steady state operating speed, and gives the drive the ability to adapt to a spectrum of different voltages and frequencies as needed. The microprocessor also provides a level of "intelligence" that allows the VFD to monitor the state of the drive itself, the motor connected to it, as well as the wiring. With this feedback, the drive can limit its output to prevent overloading, detect a broken or damaged wire, sense a ground fault, and much more.

All VFD control packages come pre-programmed, so no configuration adjustments are need at installation. Once power is connected simply press the start button, and use the up and down arrows to adjust to the desired speed.

VFD Control Package Component Diagram

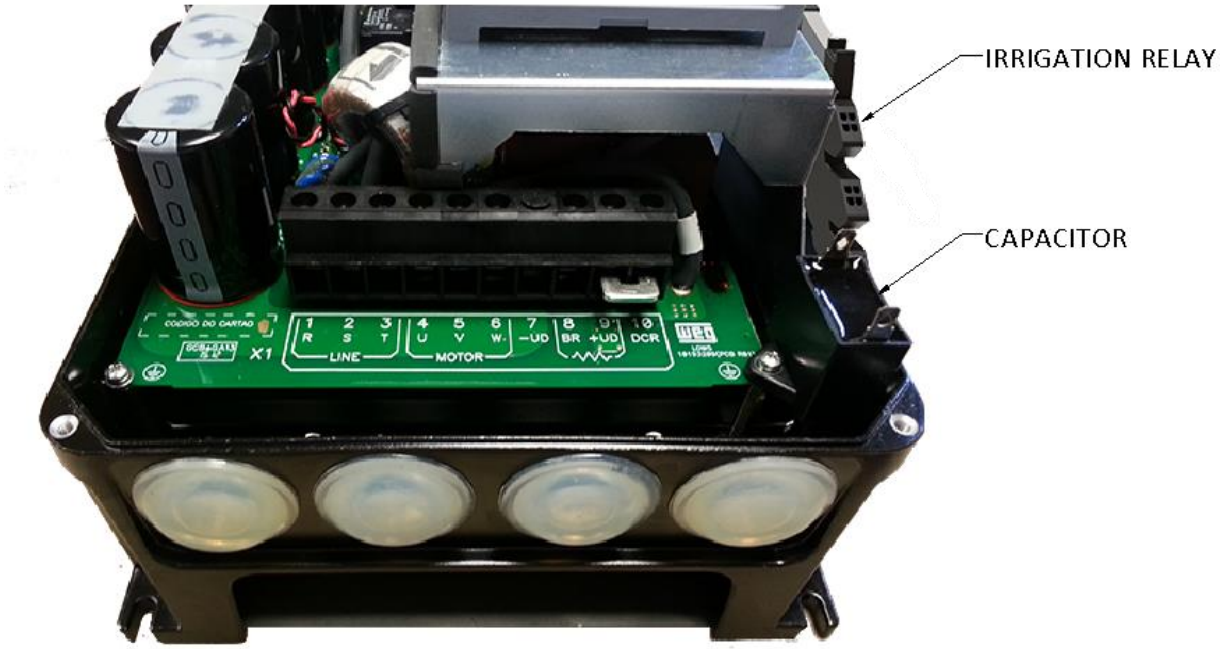

NOTE: Capacitor for oscillating motor is only used in single phase to three phase conversion applications.

VFD Control Package Electrical Schematics

190-240V, Single Phase, VFD

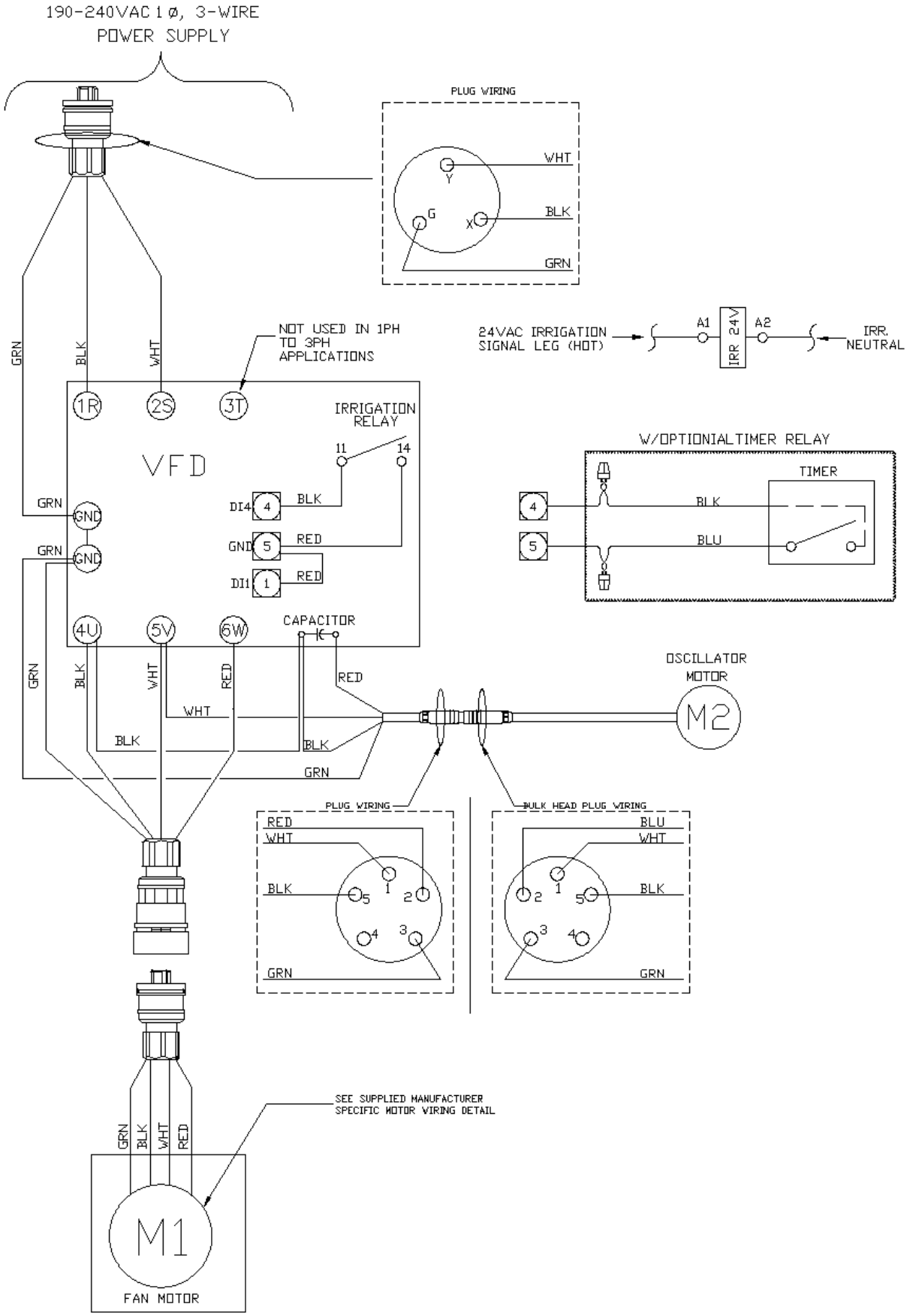

190-380V, Three Phase, VFD

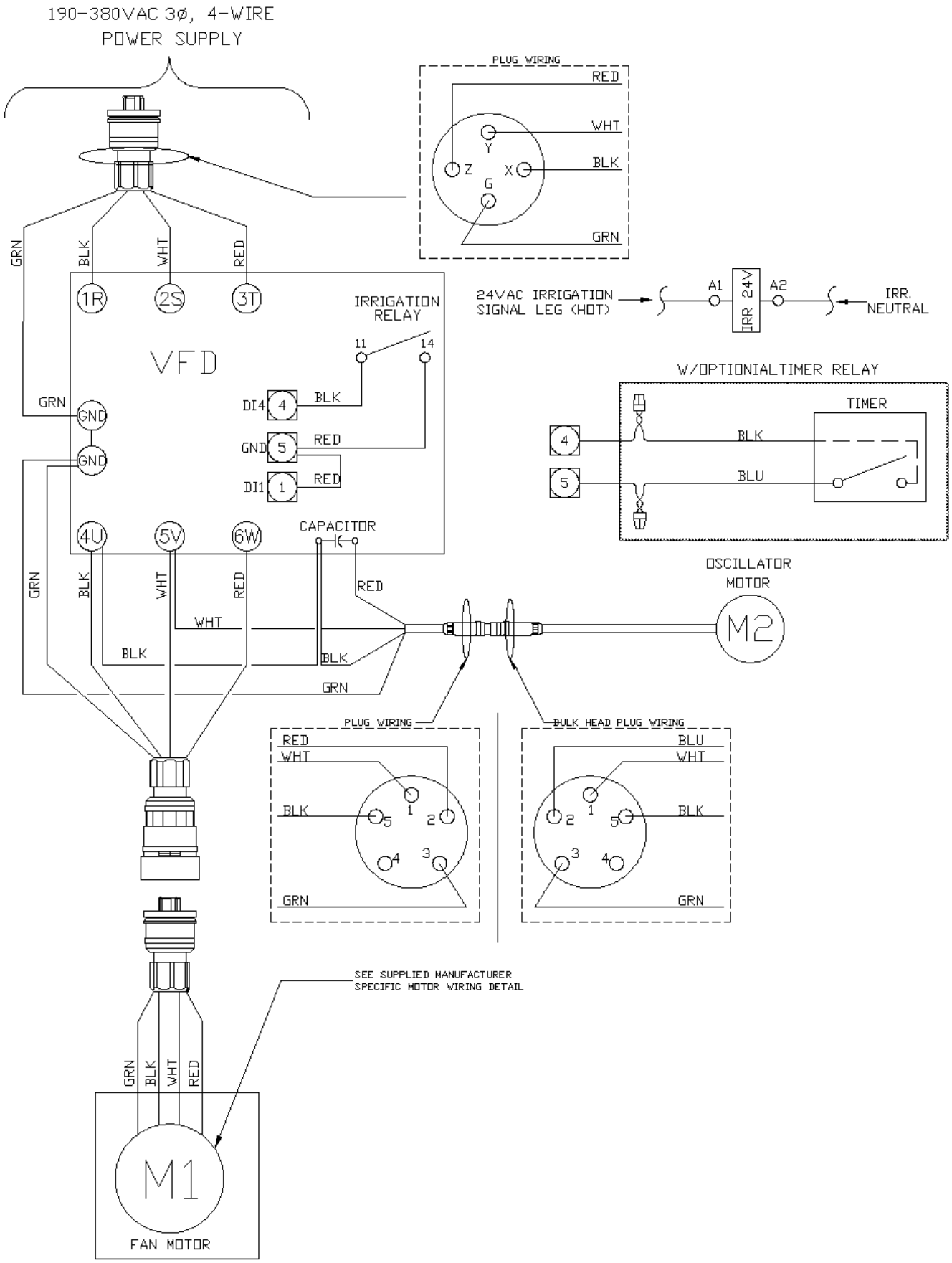

460-480V, Three Phase, VFD

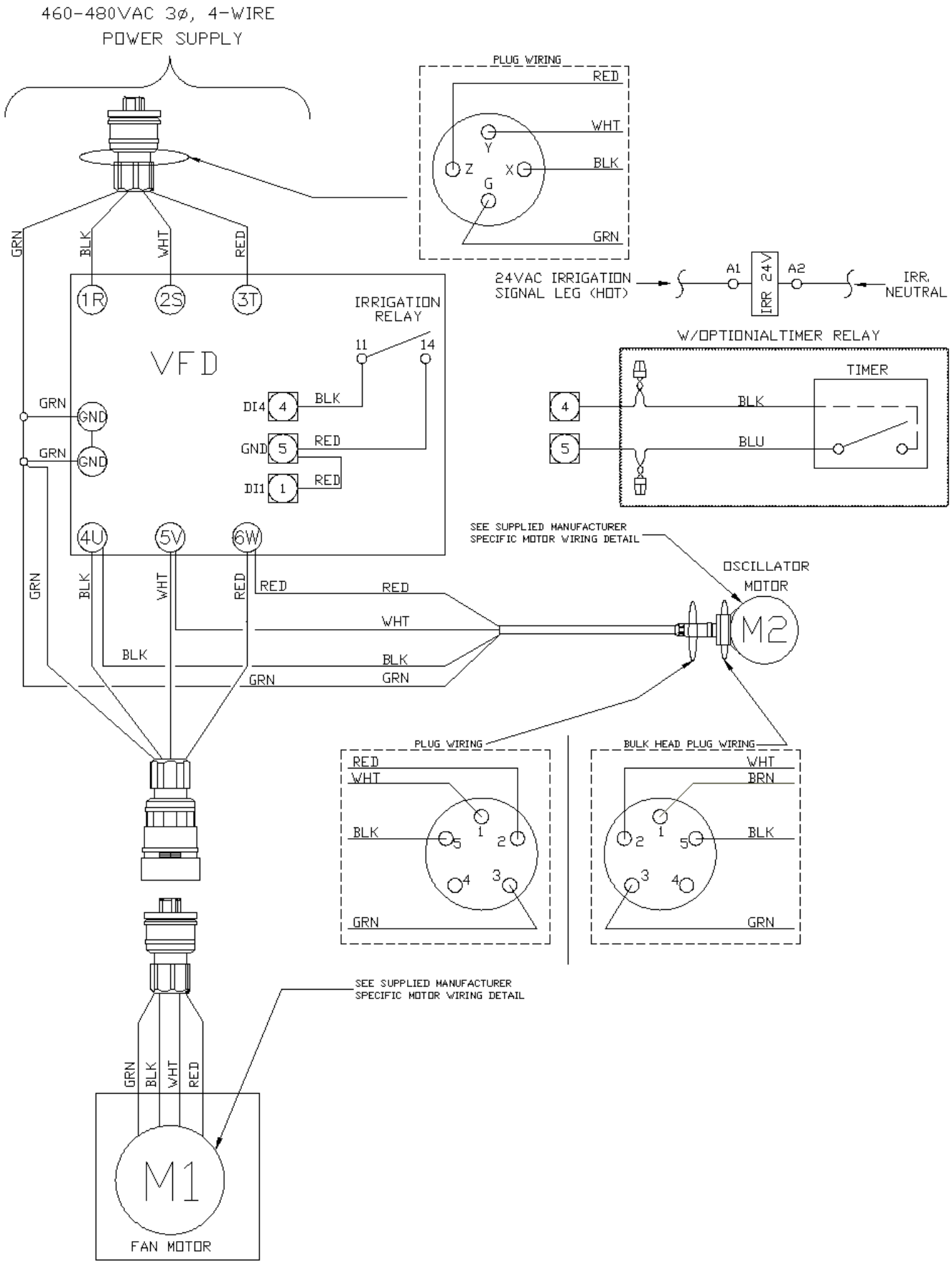

Timer Package Option

Application Notes and Instructions

The optional TurfBreeze timer packages allow the fans to start or stop automatically at a desired day and time. The packages utilize a small self-powered digital weekly timer that can store up to 40 individual events per week, and provides a single normally open switching contact.

When the control package mode switch is set to “Auto”, or the VFD mode button is pressed and sets the control state to “REM”, then the timer contact will operate the fan based on the user programmed schedule.

For applications with 277-volt power or less the timer contact can be wired directly to the incoming line voltage. Applications with voltages higher than 277 volts require an additional step-down transformer and larger enclosure.

When a timer package is added to a standard motor contactor control package a passive electrical noise filter, or “snubber”, must be added across the motor contactor’s coil. The snubber shunts the electrical noise and voltage spikes generated when the inductive coil load is switched on and off abruptly. Without the snubber wired across the coil of the contactor (terminal A1 to A2) the electrical noise generated will erase the memory of the timer causing it to lose its time setting, as well as any schedules that may have been programmed.

See the timer operation manual in Appendix C for detailed programming instructions.

Low Voltage Timer Package

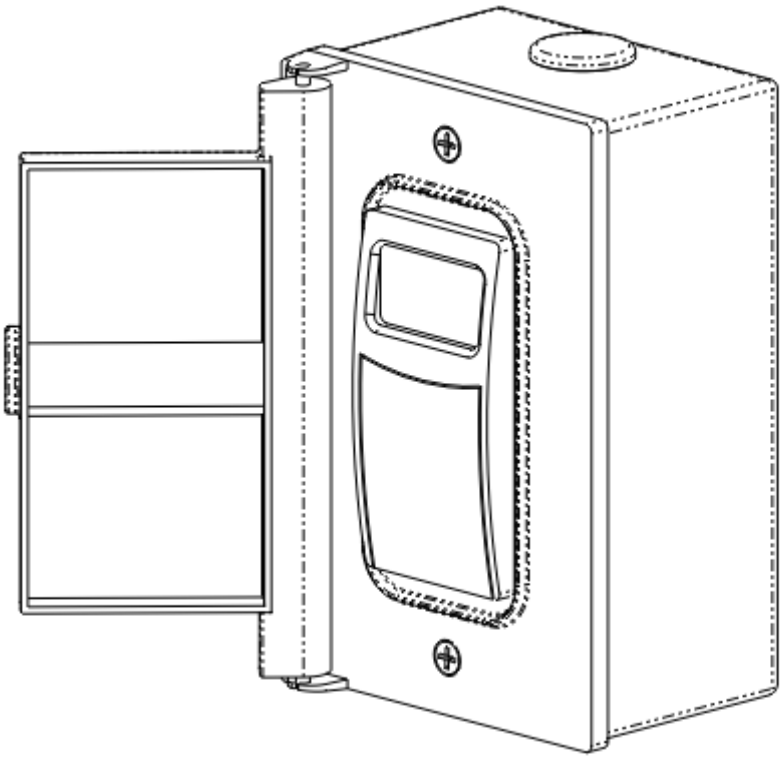

Figure 11: 190-240 Volt Timer Package

High Voltage Timer Package

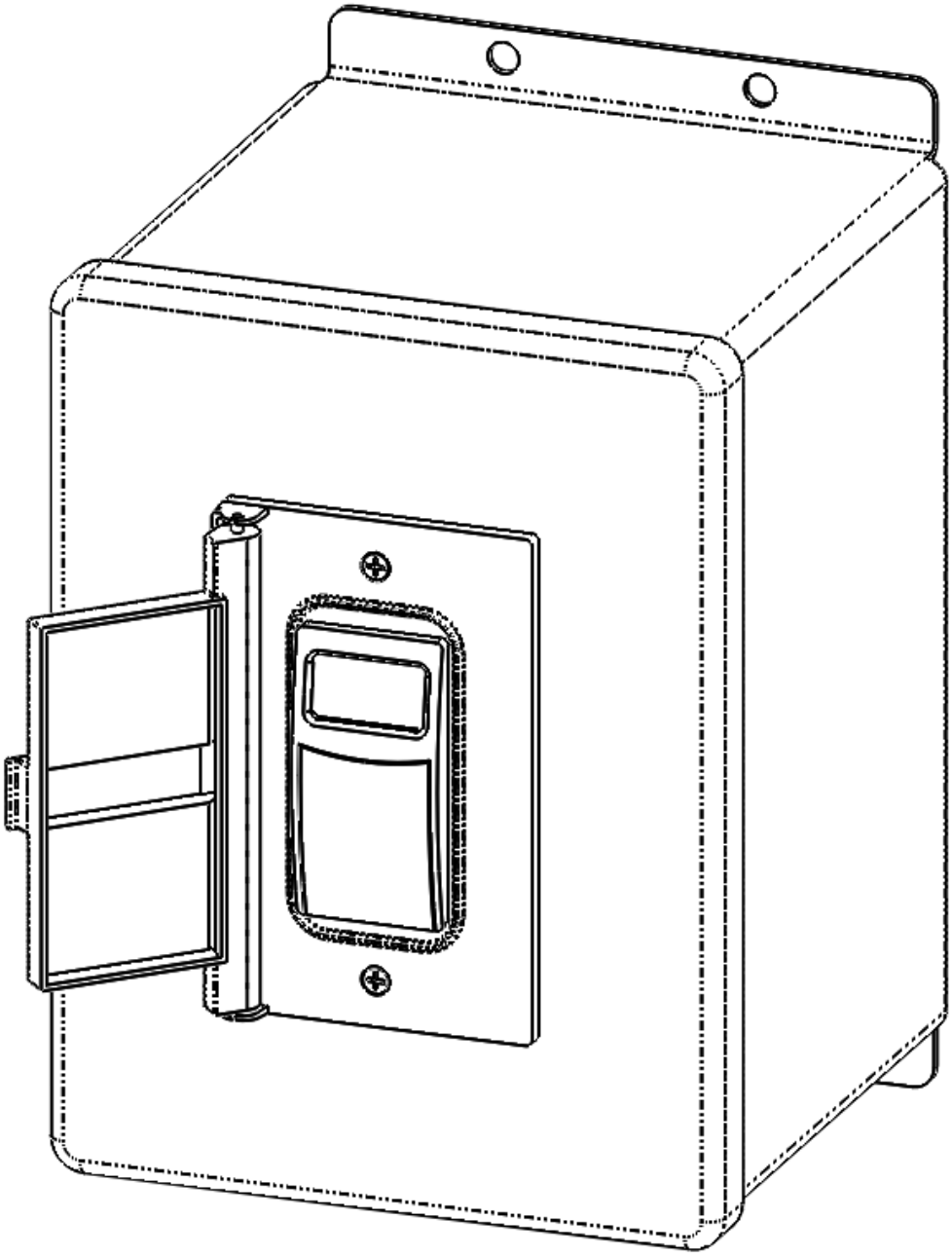

Figure 12: High Voltage Timer Package

High Voltage Timer Package Electrical Schematic

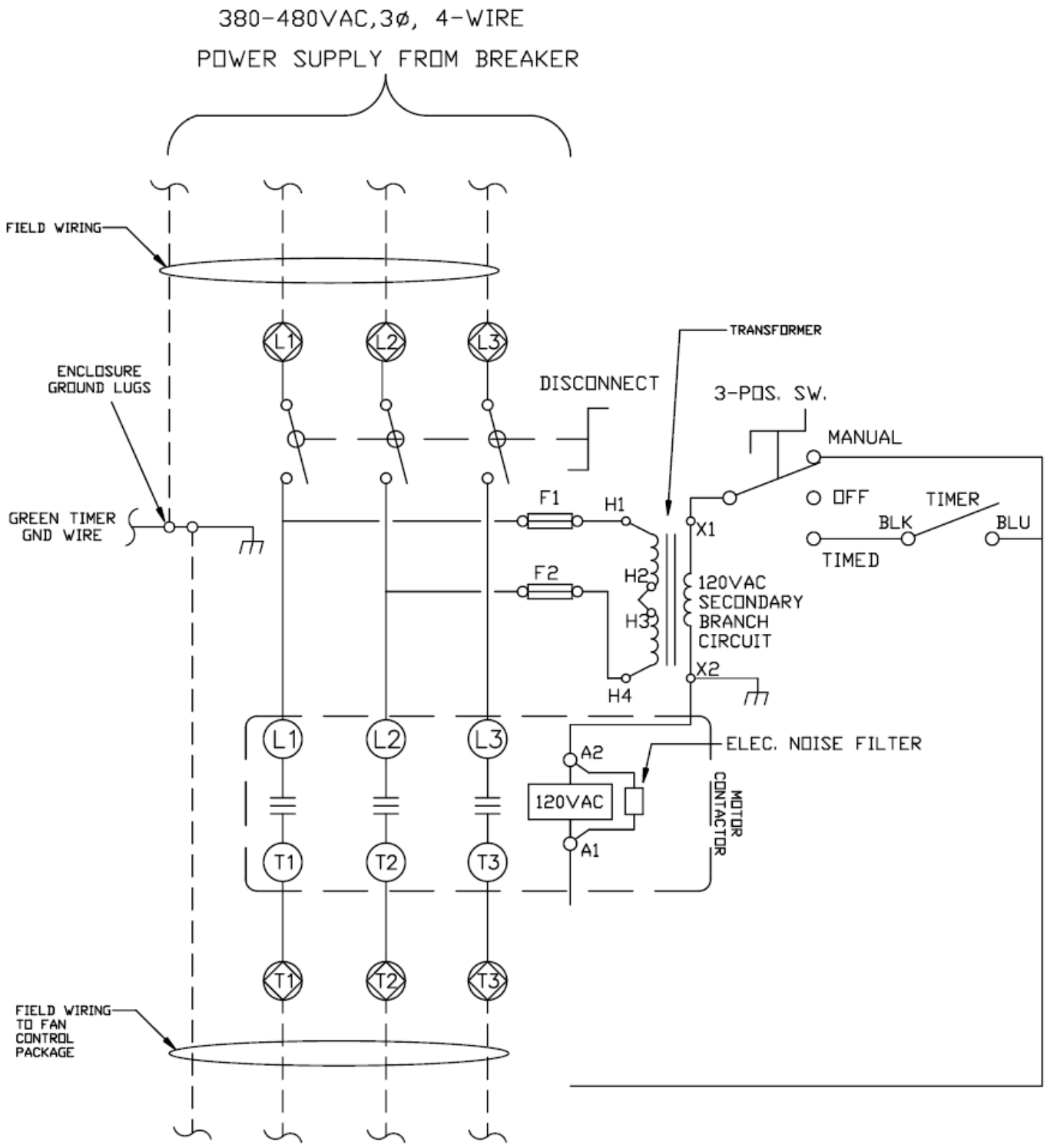

Misting Package Option

Application Notes and Instructions

Enabling/Disabling -

To enable the intermittent misting system the power must first be turned on using the red disconnect switch and mode switch below. This must be turned to the **"ON"** position. The misting system may be turned on and off while the fan is operating, there is no need to stop operation to enable or disable the misting system.

To disable the intermittent misting operation, simply turn the mode switch on the Misting Control Package to the "**OFF**" position.

- *NOTE! - Power should be completely removed from the all parts of the fan by locking out power at the source breaker or disconnect during installation, and or servicing.*

Timing & Adjustments -

The TurfBreeze Misting system is designed to operate based on user configurable asymmetric timer schedule with fully adjustable "On Time" and "Off Time". This means that when activated the misting system will come on for however long the user has configured the "On Time", will shut down for the desired "Off Time", and then repeat this cycle continuously while enabled. The ability to adjust the duration and frequency of misting cycles is imperative since the optimum timing intervals will vary greatly based on turf, soil, and weather conditions.

- *NOTE! - The disconnect located on the TurfBreeze Control Package should be turned to the off position prior to opening the Misting Control Package to adjust the timer settings.*

To adjust the timing intervals, remove power from the Misting Control Package, and remove the face plate. Set the "on time", how long the mist will be on, by adjusting the top dials on the timer relay, and set the "off time", how long the mist will be off, by adjusting the bottom dials on the timer relay.

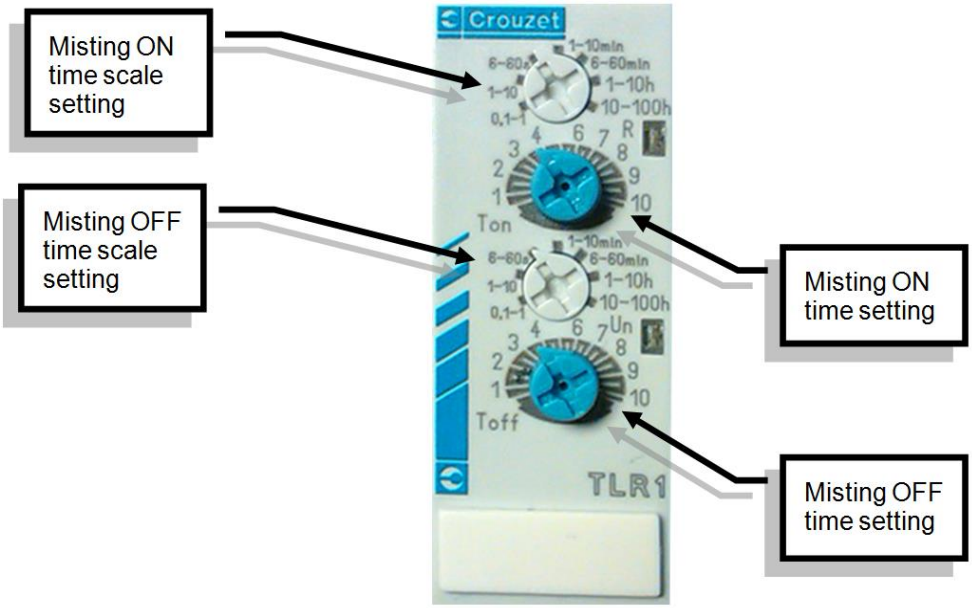

Misting Control Package Component Diagram

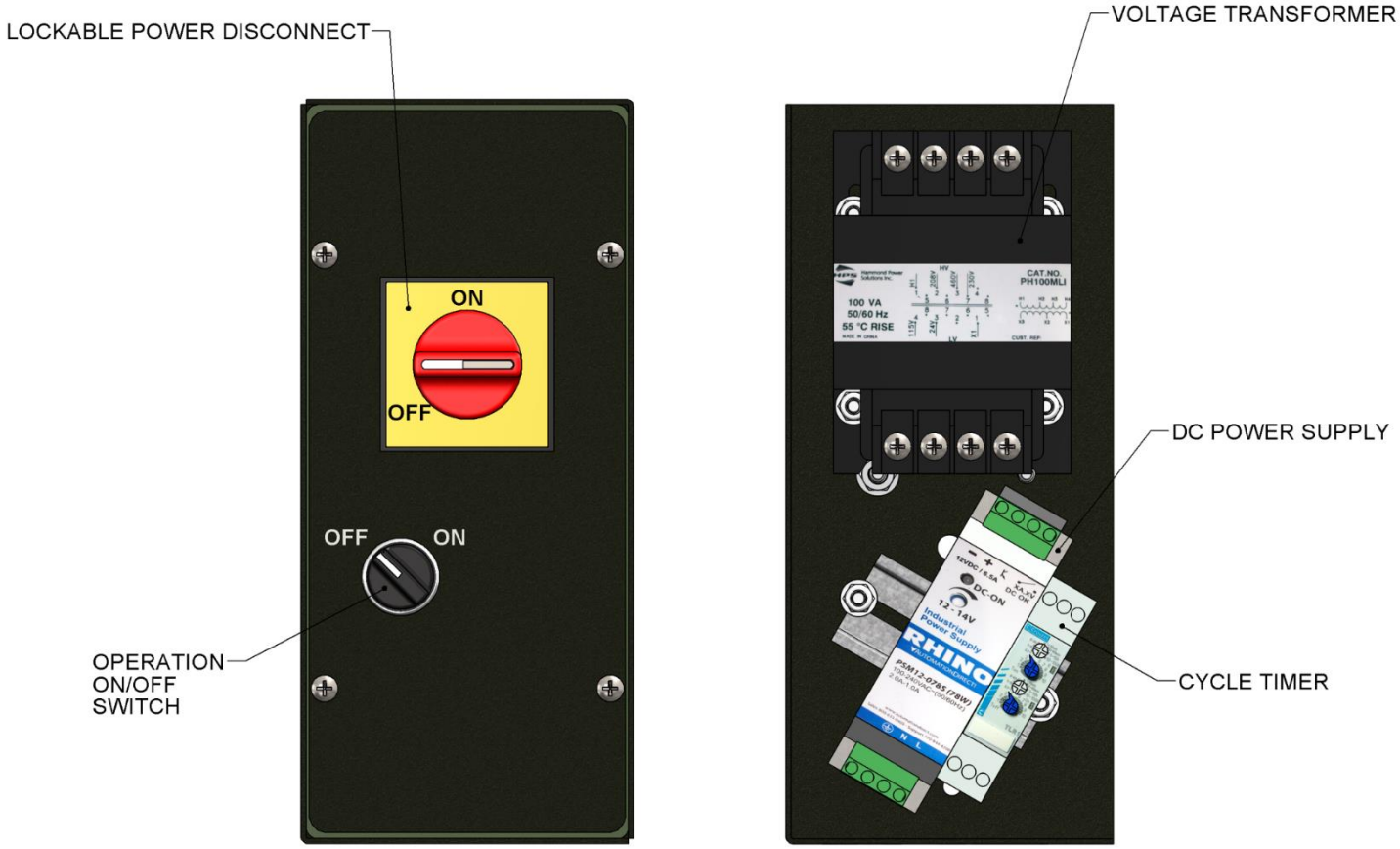

Fan Trailers

Towing Notes and Instructions

⚠ **Warning**

- ***Vehicle towing capacity should be at least 1416 lb. (644 kg) gross trailer weight, with trailer tongue-weight capacity of 156 lb. (71 kg).***
- ***Do not allow riders on unit being towed.***
- ***Normal tow vehicle operating speed should be reduced when towing.***
- ***Extreme caution should be used when towing. Keep bystanders at a safe distance.***
- ***To prevent vehicle overturning, while towing.***
- ***To avoid the possibility of losing control of or overturning always reduce speed for adverse driving conditions such as wet grass or rough terrain, drive straight up/down slopes, and avoid slopes exceeding 20° from horizontal.***

Fan Anchoring

When transporting fans using the fan trailer always be sure to disconnect the oscillating rod-end assembly from the crank arm, and bolt it to one of the anchor points on the oscillator plate as shown below. Failure to anchor the fan to the plate in this manor during transport can permanently damage the oscillating motor. Note that the crank arm should be positioned so that there is sufficient clearance prior to disconnecting power. Otherwise the crank arm will have to be removed in-order to connect the rod-end assembly to the anchor point.

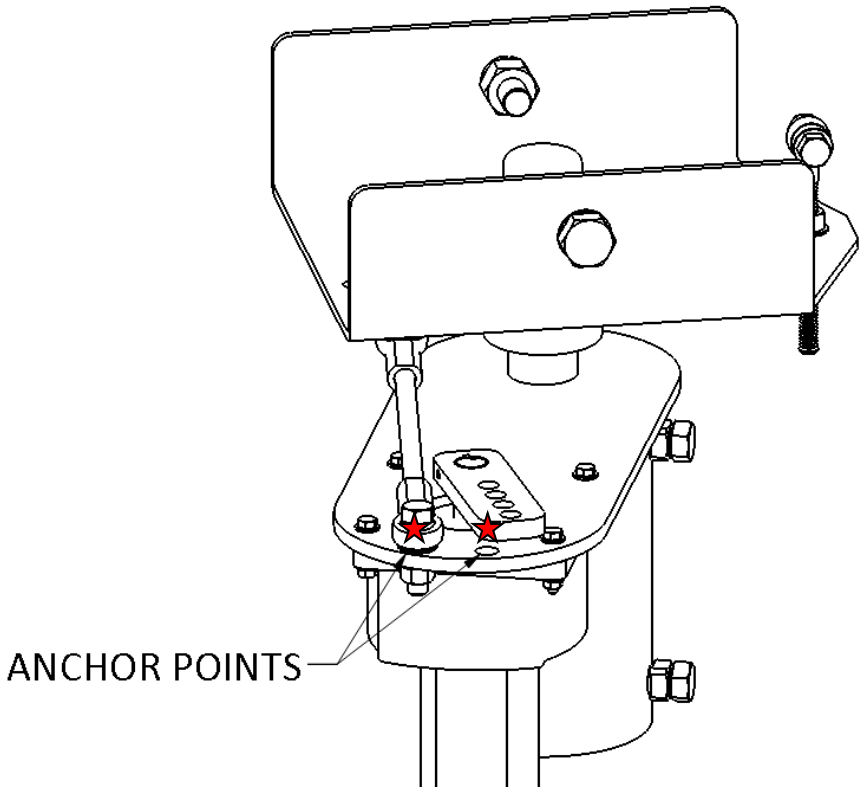

Figure 13: Towing anchor points

Trailer Component Diagram

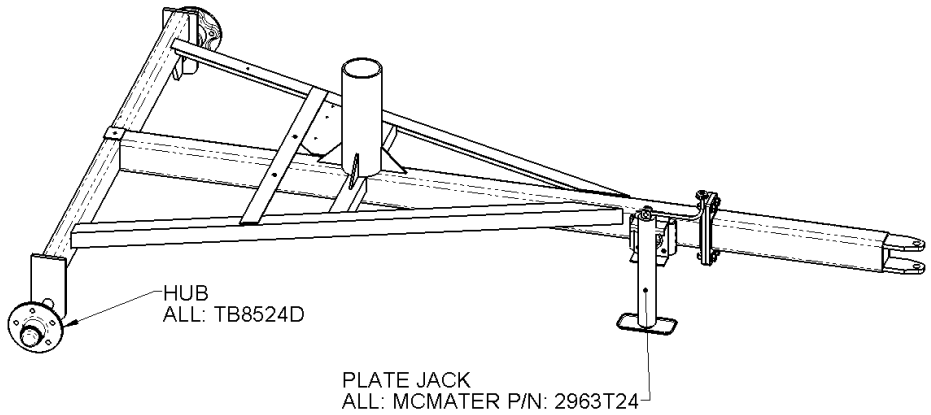

Trailer Maintenance and Servicing

Wheel Bearings

Trailer wheel bearings should be inspected for proper tension, and the bearings repacked annually.

NOTE: The spindle nut should only be finger tightened to the point where the bearing play just becomes undetectable.

Appendix A, Electric Motor Wiring Diagrams

Figure 17: Belt Drive Fan Motor

Figure 16: C-faced Motor for Gear Drive Fans

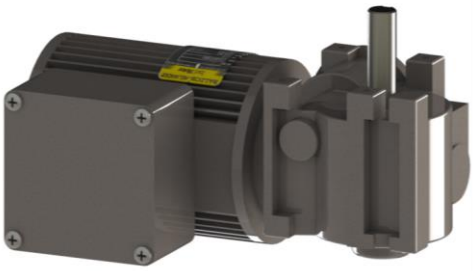

Figure 15: Baldor Gearmotor

Figure 14: Brother Gearmotor

CD0005

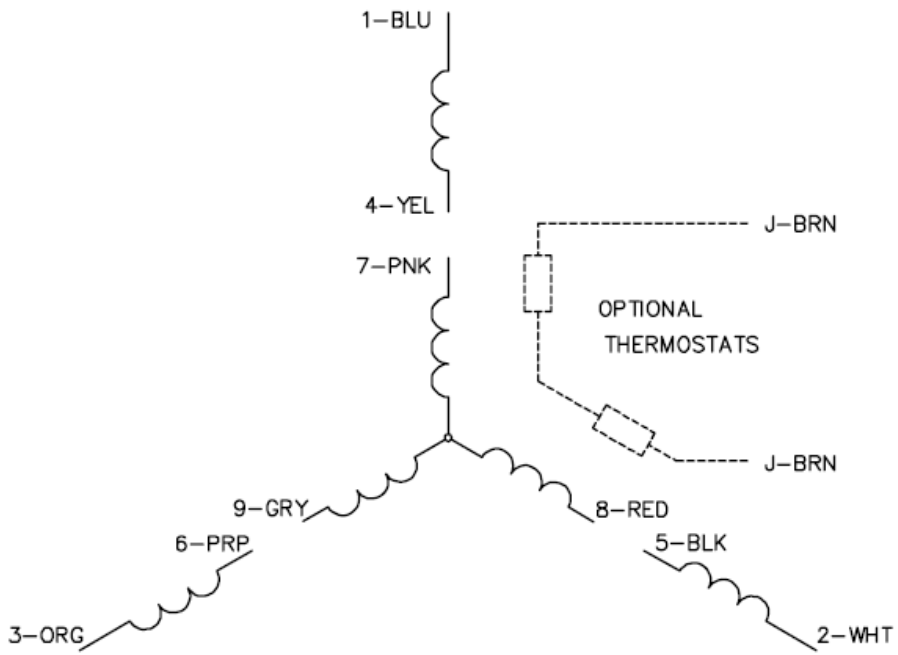

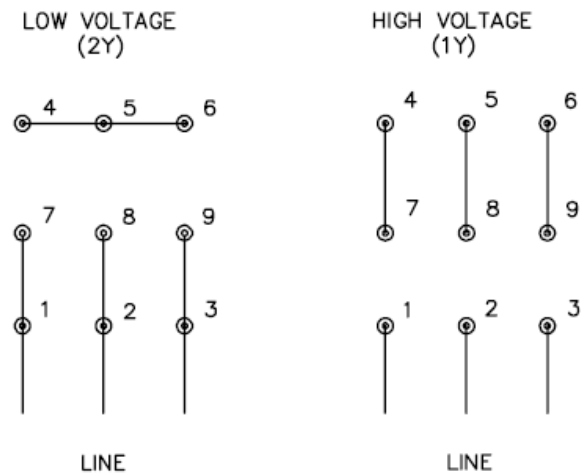

NOTES:

1. INTERCHANGE ANY TWO LINE LEADS TO REVERSE ROTATION.
2. OPTIONAL THERMOSTATS ARE PROVIDED WHEN SPECIFIED.
3. ACTUAL NUMBER OF INTERNAL PARALLEL CIRCUITS MAY BE A MULTIPLE OF THOSE SHOWN ABOVE.
4. LEAD COLORS ARE OPTIONAL. LEADS MUST ALWAYS BE NUMBERED AS SHOWN.

REV. DESC: REVISE TO SHOW OPTIONAL COLORS			BALDOR ELECTRIC Co.
REV. LTR: E	BY: JLP	REVISED: 01/19/99 10:15	TDR: 0171435
CD0005		FILE: AAA00005140	MDL: –
		MTL: –	3PH, DV, 9 LEADS

CD0005

Baldor 7.5HP 208-230v, 1Ø

BALDOR • RELIANCE Product Information Packet: 37J387X247 - 7.5HP,1725RPM,1PH,60HZ,215T,3744LC,TEFC

CD0152

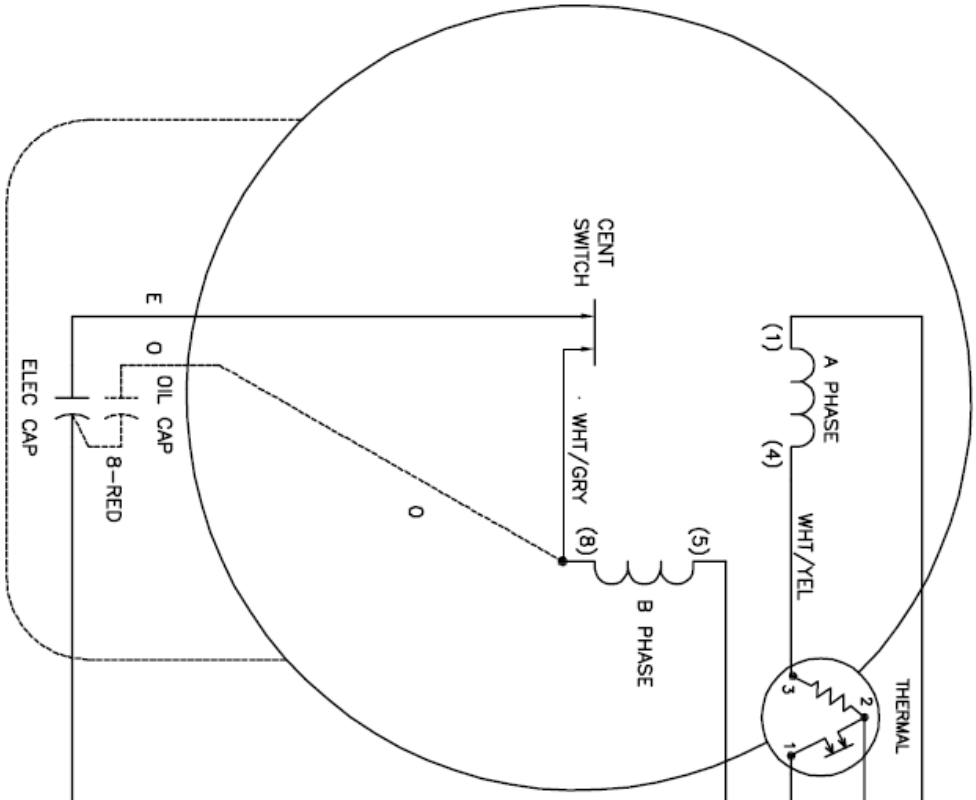

	LINE A	LINE B	JOIN
STD	1,8	4	J,5
OPP	1,5	4	J,8

NOTES:

1. STANDARD ROTATION IS CCW FACING END OPPOSITE SHAFT EXTENSION.
2. MULTIPLE CAPACITORS ARE CONNECTED IN PARALLEL UNLESS OTHERWISE SPECIFIED.
3. OPTIONAL OIL CAPACITOR IS PROVIDED WHEN SPECIFIED.
4. CAPACITORS MAY BE SEPERATELY MOUNTED.
5. LEAD COLORS ARE OPTIONAL. LEADS MUST ALWAYS BE NUMBERED AS SHOWN.

REV. DESC: REMOVE OPTIONAL THERMAL CONNECTION		
REV. LTR: D	VERSION: 01	TDR: 000000373039
CD0152	FILE: \AAA\00026\903	REVISED: 11:23:45 08/11/2005
	MTL: –	BY: ENJOEP0

BALDOR ELECTRIC Co.

TYPE L OR LC, SV, REV, 5 LDS, THERM, CAPS MAY BE SEP MTD

CD0152

Baldor 5HP 208-230/460v, 3Ø

BALDOR • RELIANCE

Product Information Packet: 36K896T031E7 - 5HP,1750RPM,3PH,60HZ,184T,3643M,TEFC,W2

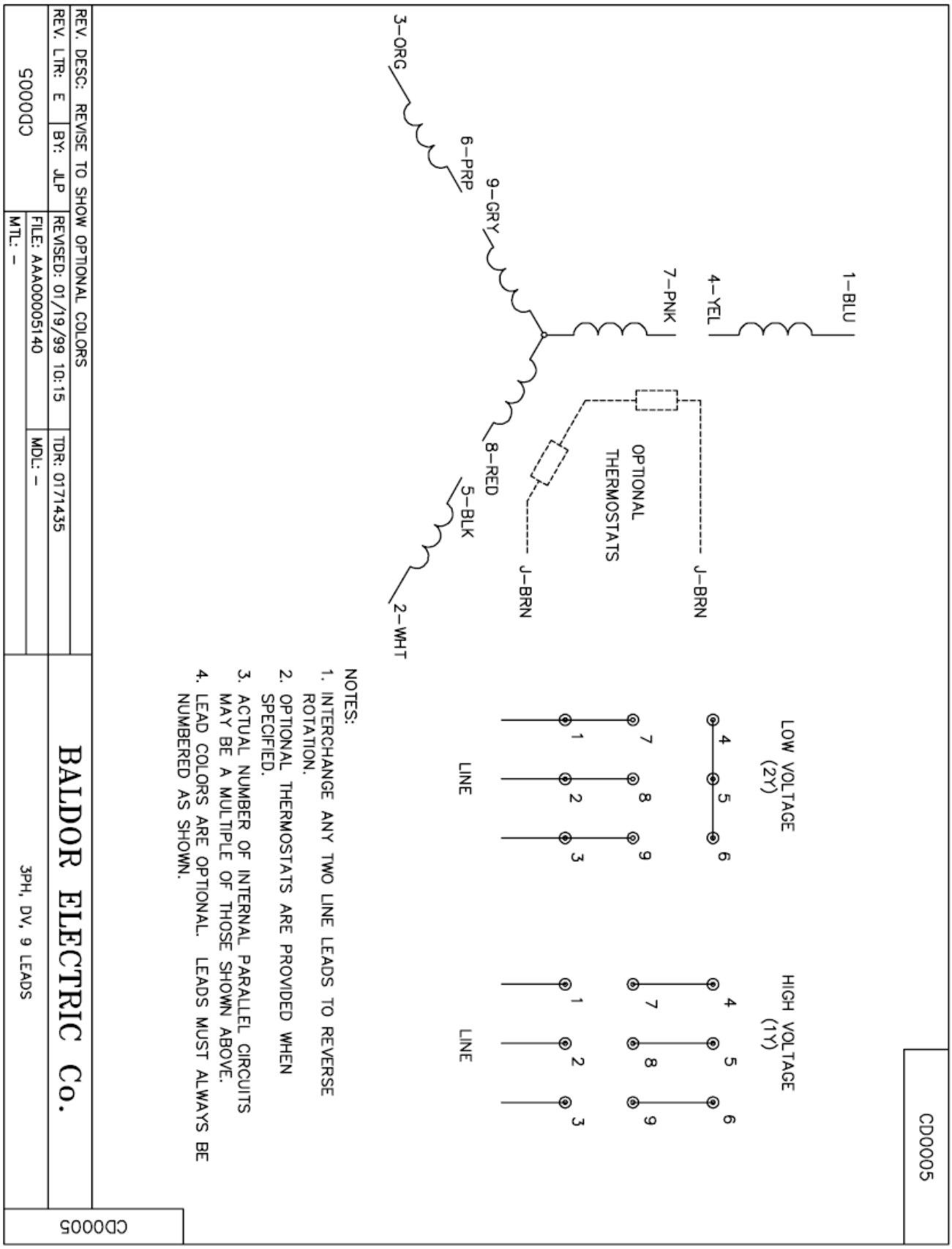

Baldor 5HP 208-230v, 1Ø

BALDOR • RELIANCE Product Information Packet: 36J587T214 - 5HP,1735RPM,1PH,60HZ,184T,3646LC,TEFC,F1

CD0152

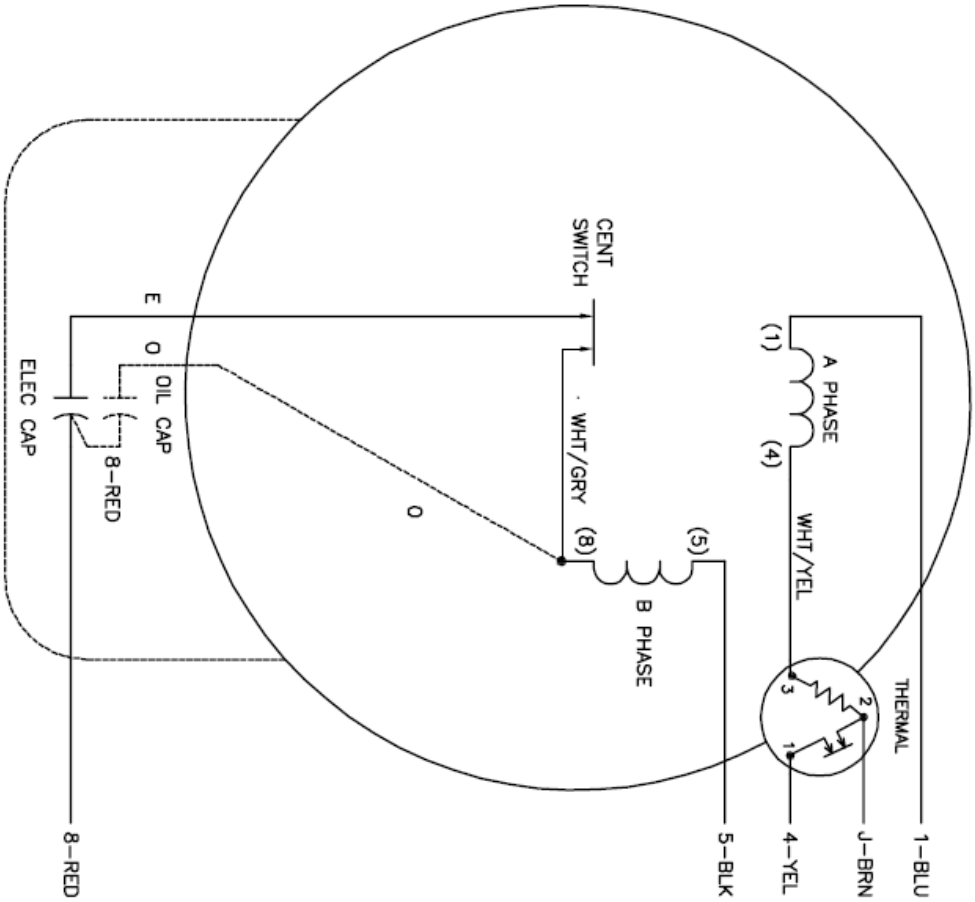

	LINE A	LINE B	JOIN
STD	1,8	4	J,5
OPP	1,5	4	J,8

NOTES:

1. STANDARD ROTATION IS CCW FACING END OPPOSITE SHAFT EXTENSION.
2. MULTIPLE CAPACITORS ARE CONNECTED IN PARALLEL UNLESS OTHERWISE SPECIFIED.
3. OPTIONAL OIL CAPACITOR IS PROVIDED WHEN SPECIFIED.
4. CAPACITORS MAY BE SEPERATELY MOUNTED.
5. LEAD COLORS ARE OPTIONAL. LEADS MUST ALWAYS BE NUMBERED AS SHOWN.

REV. DESC: REMOVE OPTIONAL THERMAL CONNECTION		TDR: 000000373039
REV. LTR: D	VERSION: 01	
CD0152	FILE: \AAA\00026\903	REVISED: 11:23:45 08/11/2005
	MTL: –	BY: ENJOEPO

BALDOR ELECTRIC Co.

TYPE L OR LC, SV, REV, 5 LDS, THERM, CAPS MAY BE SEP MTD

CD0152

Leeson 5HP 208-230/460v, 3Ø

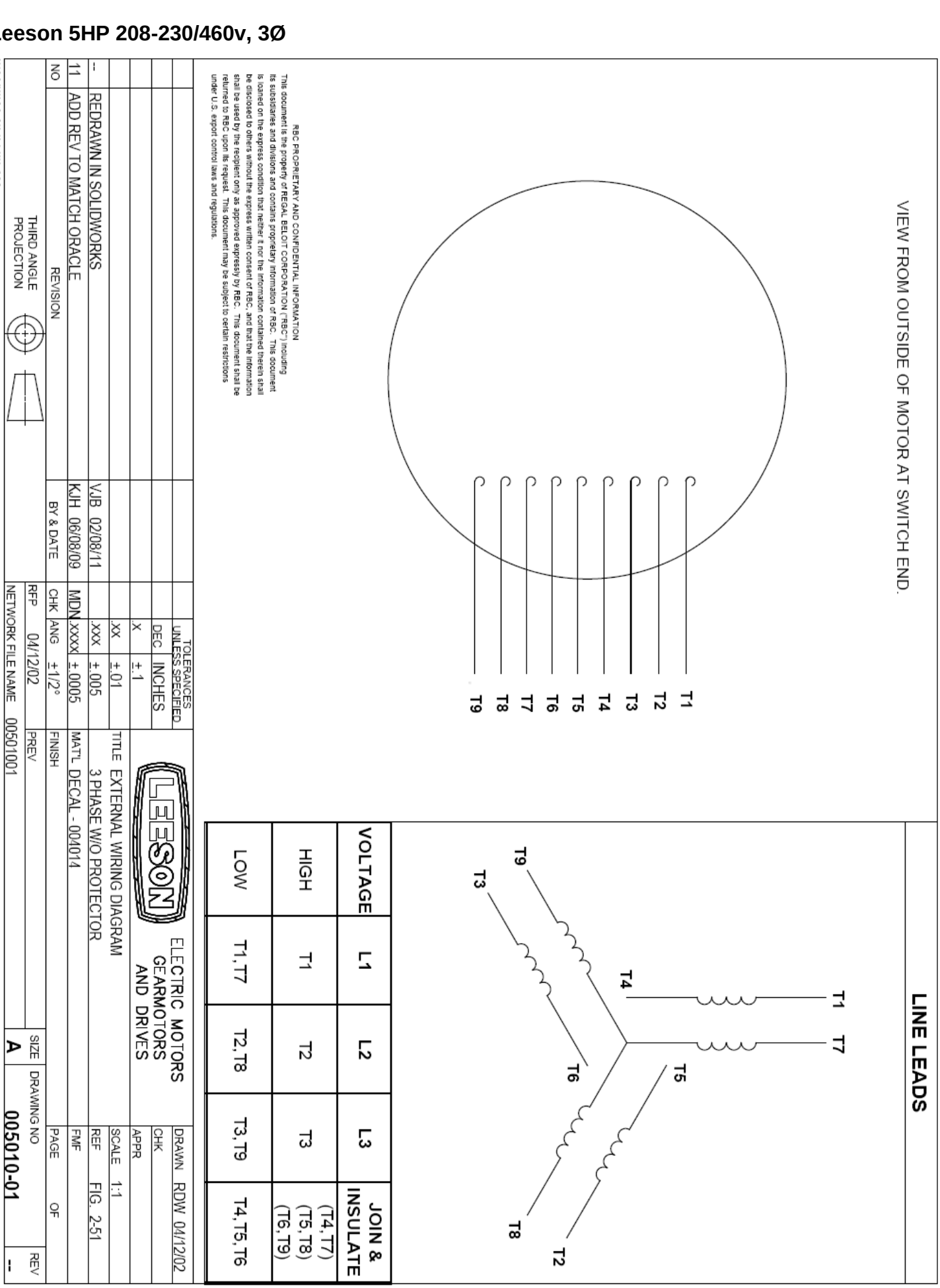

Leeson 5HP 208-230v, 1Ø

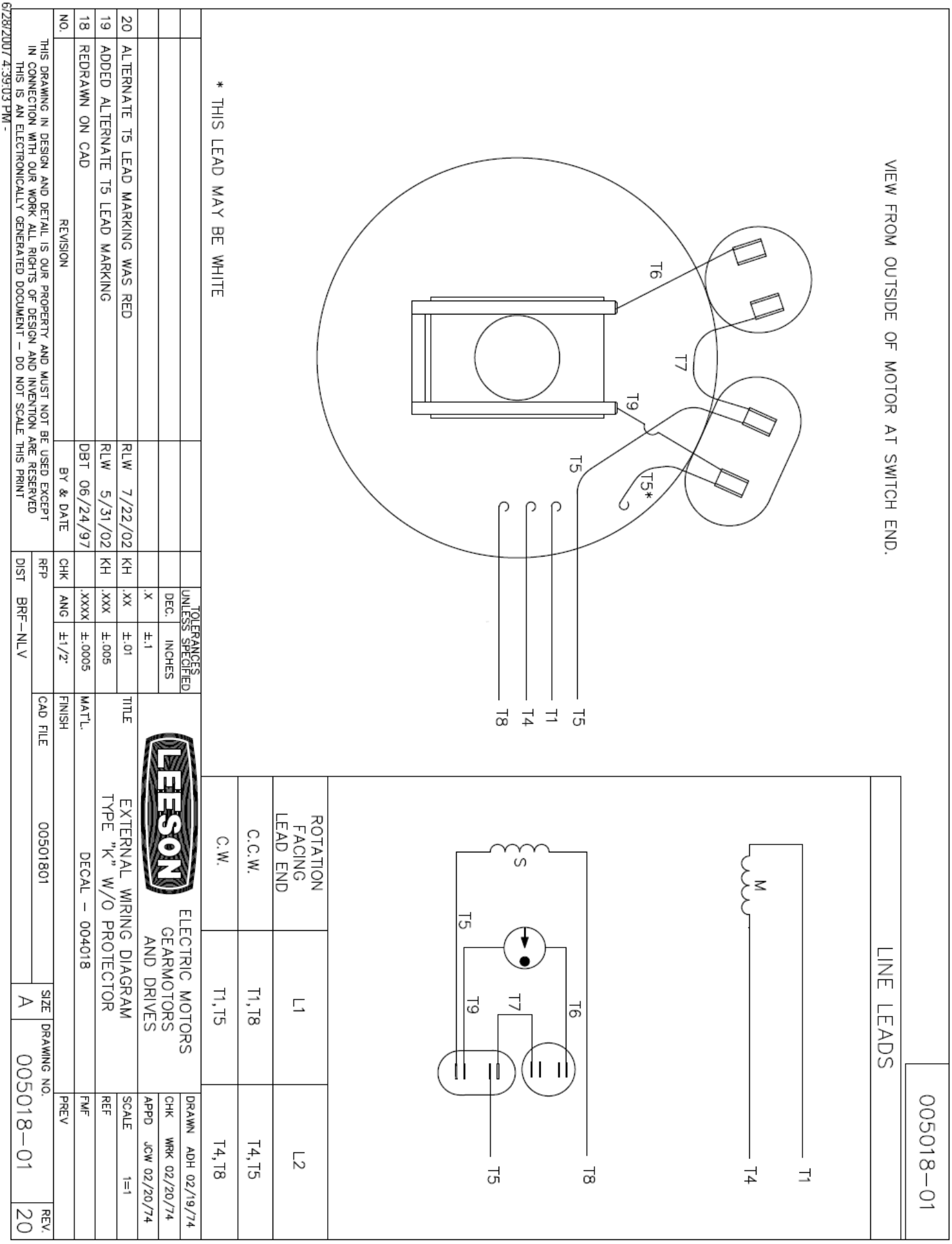

Baldor 3HP 208-230/460v, 3Ø

BALDOR • RELIANCE

Product Information Packet: AOM3704T - 3HP,1140RPM,3PH,60HZ,213T,3723M,TEAO,F1

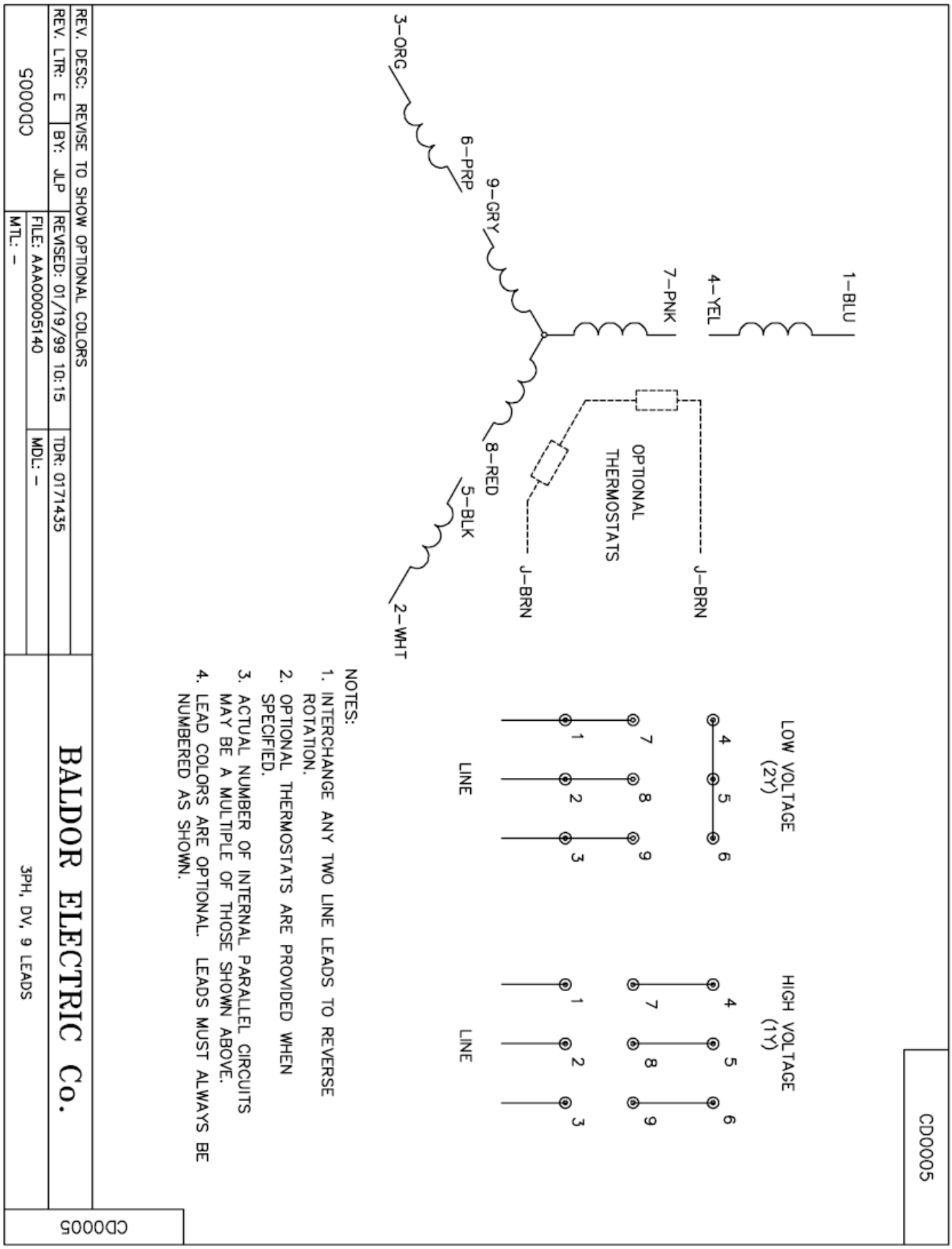

Baldor 3HP 208-230v, 1Ø

BALDOR • RELIANCE Product Information Packet: 37E290T586 - 3HP,1140RPM,1PH,60HZ,213T,3744LC,TEFC,F1

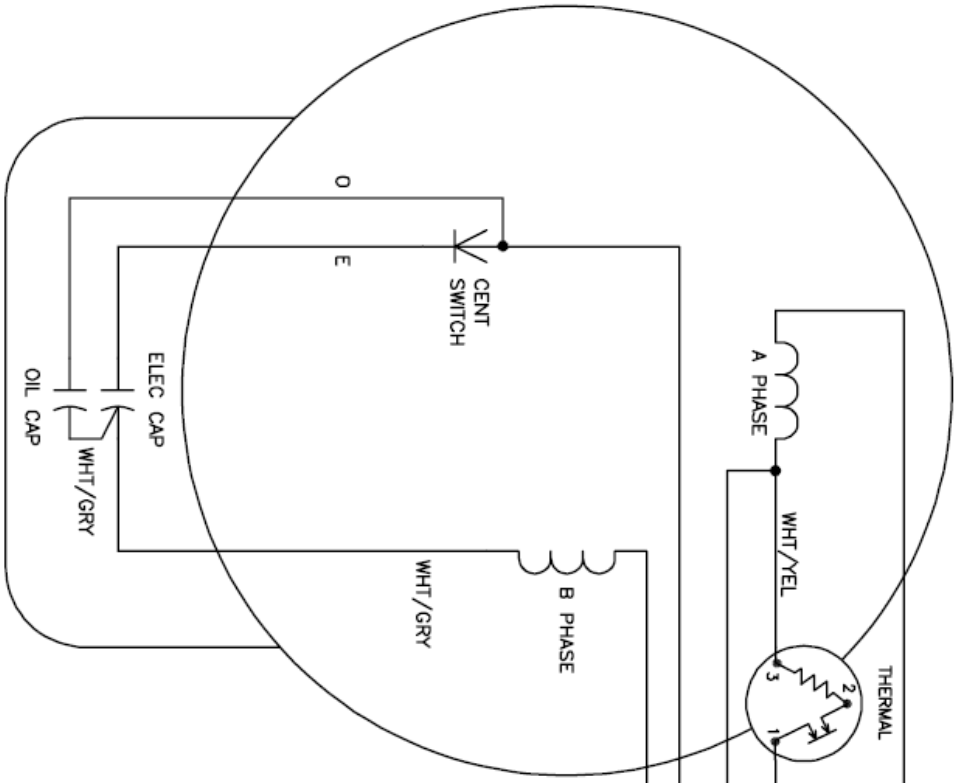

	LINE A	LINE B	JOIN
STD	1,8	4	J,5
OPP	1,5	4	J,8

NOTES:

1. STANDARD ROTATION IS CCW FACING END OPPOSITE SHAFT EXTENSION.
2. MULTIPLE CAPACITORS ARE CONNECTED IN PARALLEL UNLESS OTHERWISE SPECIFIED.
3. LEAD COLORS ARE OPTIONAL. LEADS MUST ALWAYS BE NUMBERED AS SHOWN.

CD0774

REV.	DESC: REVISE TO SHOW OPTIONAL COLORS		
REV. LTR: B	BY: EAH	REVISED: 05/05/99 9:22	TDR: 0179909
CD0774		FILE: AAA0000753B	MDL: –
		MTL: –	

BALDOR ELECTRIC Co.

TYPE LC, SV, REV, THERMAL, LINE AMPS THRU HEATER, 5 LEADS

CD0774

Baldor 2HP 208-230/460v, 3Ø

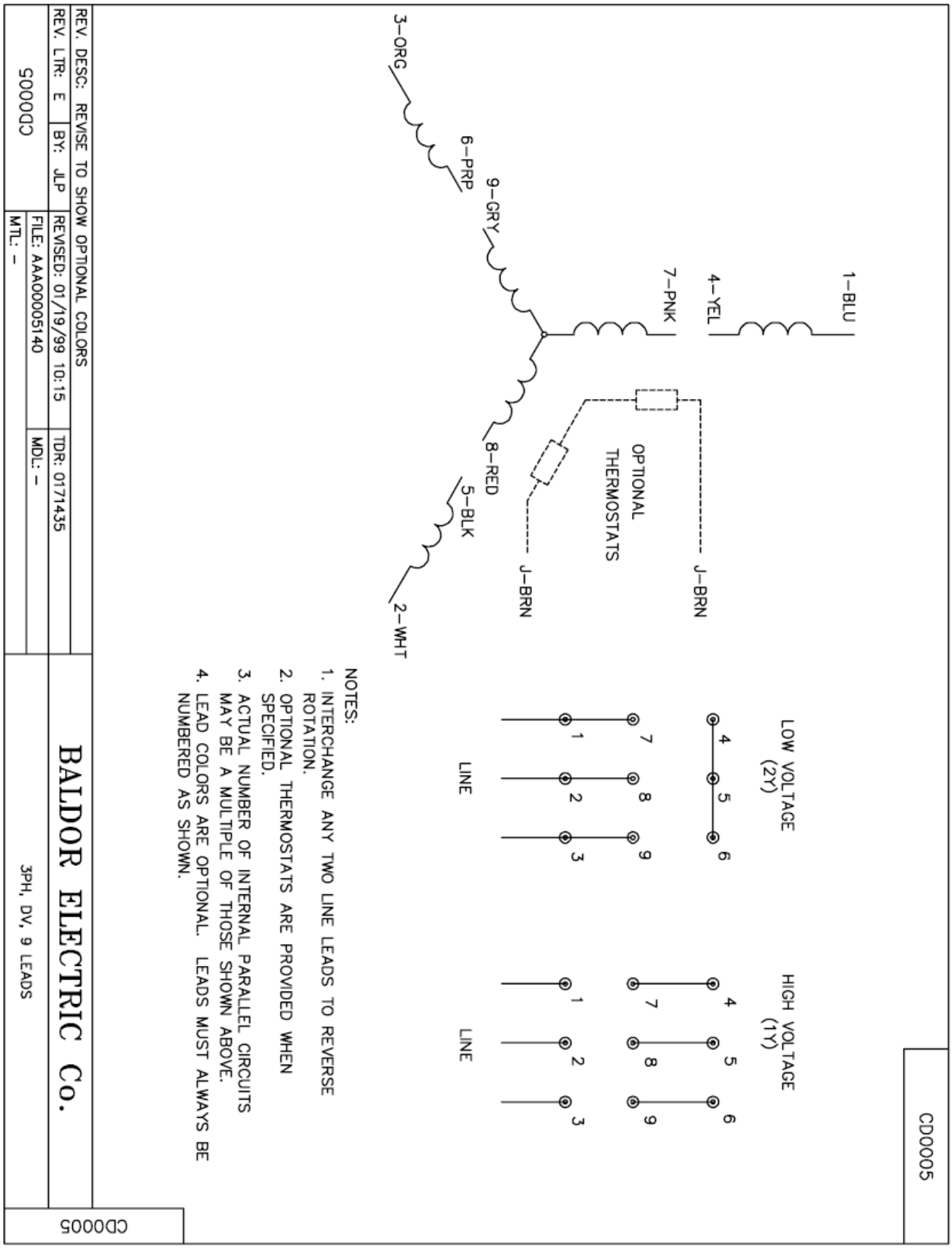

Baldor 2HP 208-230v, 1Ø

BALDOR • RELIANCE Product Information Packet: 36K198T247 - 2HP,1160RPM,1PH,60HZ,184T,3646LC,TEFC,F1

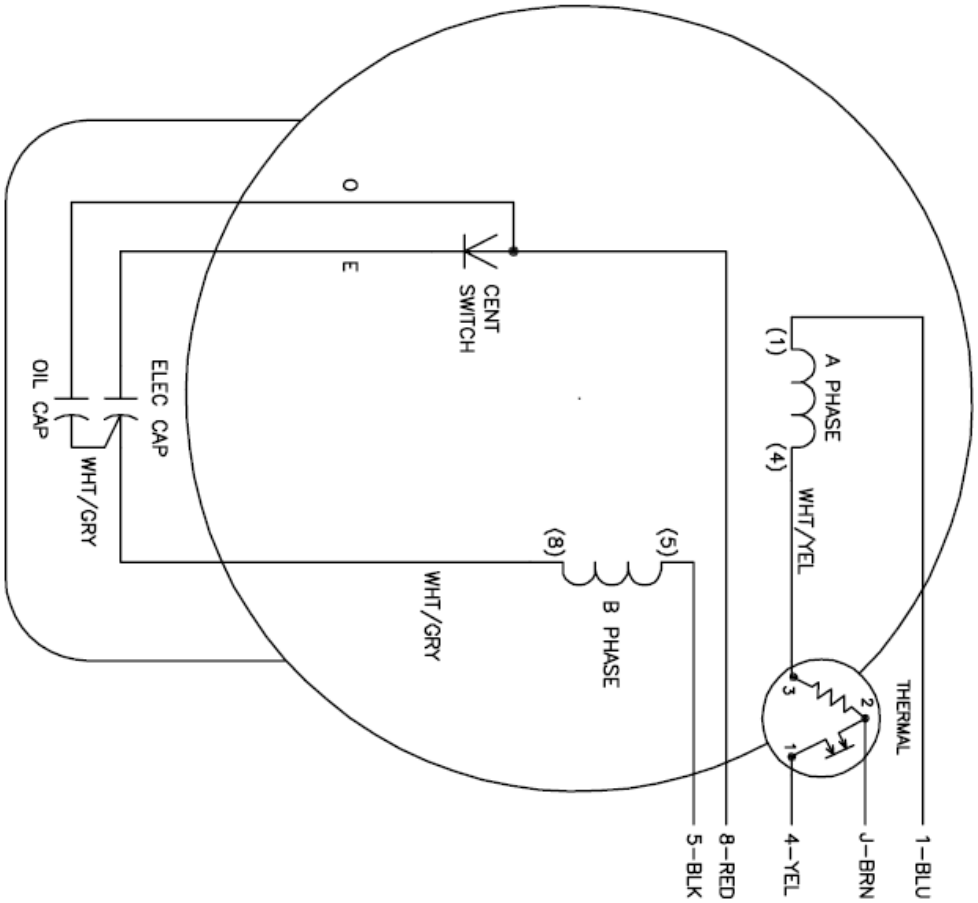

	LINE A	LINE B	JOIN
STD	1,8	4	J,5
OPP	1,5	4	J,8

NOTES:

1. STANDARD ROTATION IS CCW FACING END OPPOSITE SHAFT EXTENSION.
2. MULTIPLE CAPACITORS ARE CONNECTED IN PARALLEL UNLESS OTHERWISE SPECIFIED.
3. LEAD COLORS ARE OPTIONAL. LEADS MUST ALWAYS BE NUMBERED AS SHOWN.

CD0002A02

REV. DESC: REMOVE 2-TERMINAL THERMAL DETAIL, SEE CD0002A04

REV. LTR: D | VERSION: 01 | TDR: 0000003360649

FILE: \AAA\00007\520 | REVISED: 17:11:40 04/15/2005

MTL: - | BY: ENJOEPO

CD0002A02

BALDOR ELECTRIC Co.

TYPE LC, SV, REV, THERMAL, 5 LEADS

CD0002A02

Appendix C, TB62G Engine Manual

BRIGGS&STRATTON

COMMERCIAL POWER

en Operator's Manual
da Betjeningsvejledning
de Bedienungsanleitung
el Εγχειρίδιο Χρήσης
es Manual del Operario
fi Käyttäjän käsikirja
fr Manuel de l'opérateur
it Manuale dell'Operatore
nl Gebruiksaanwijzing
no Brukerhåndbok
pt Manual do Operador
sv Instruktionsbok

Model 290000	Vanguard™ Gasoline	Model 350000	Vanguard™ Gasoline
Model 300000	Vanguard™ Gasoline	Model 380000	Vanguard™ Gasoline

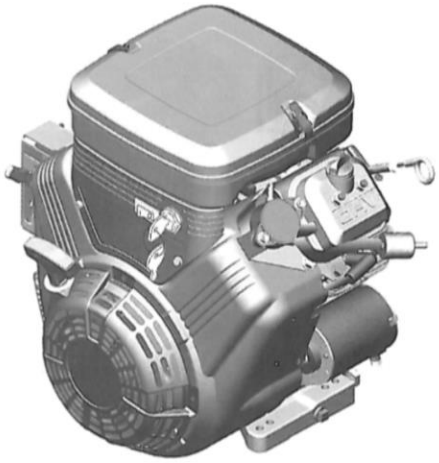

Briggs & Stratton is a registered trademark of Briggs & Stratton Corporation

© 2011 Briggs & Stratton Corporation, Milwaukee, WI, USA. All rights reserved.

Form No. 279771WST
Revision: A

English	Dansk	Deutsch	Ελληνικά	Español	Suomi	Français	Italiano	Nederlands	Norsk	Português	Svenska
en	da	de	el	es	fi	fr	it	nl	no	pt	sv

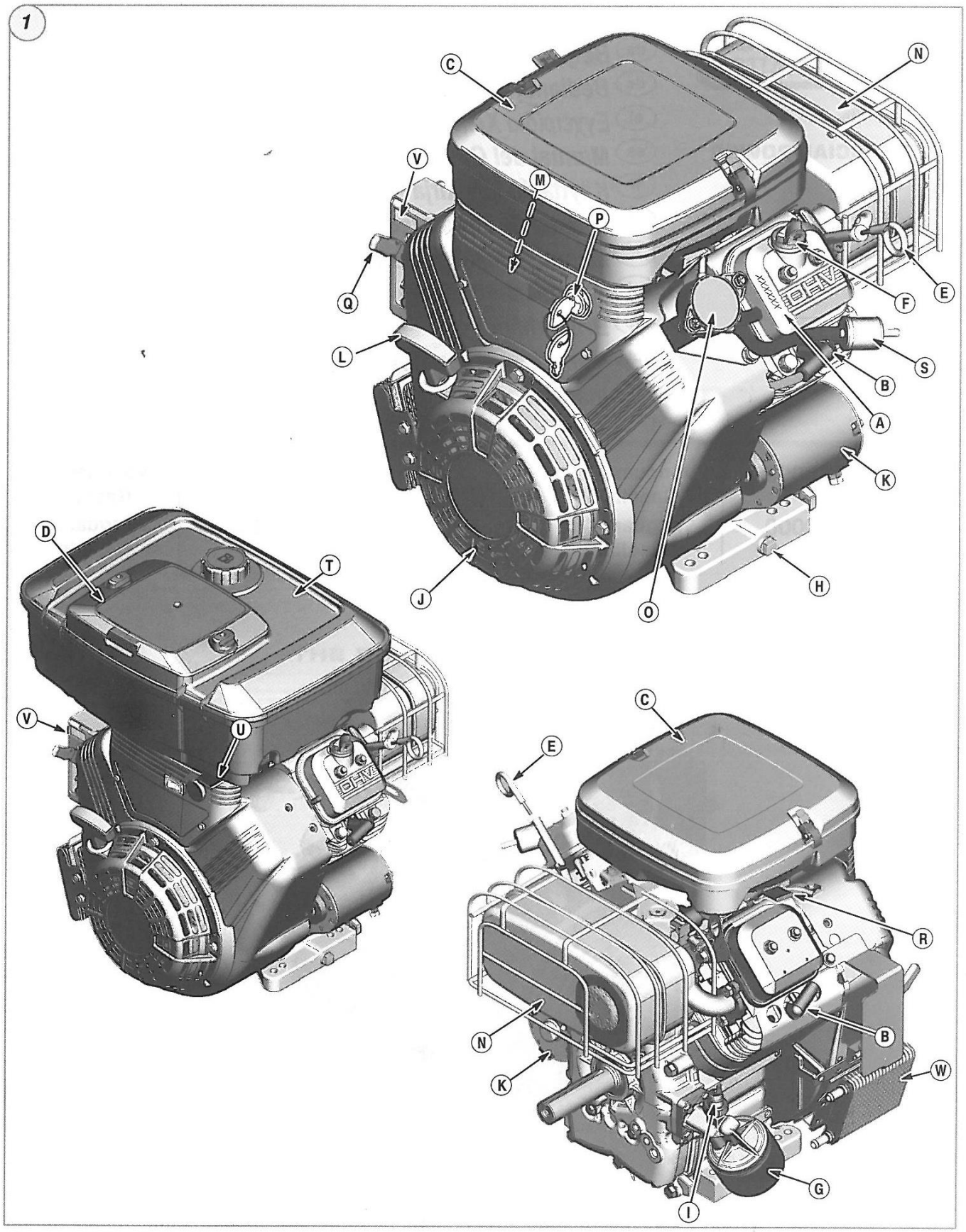
1
C
N
V
M
P
Q
E
F
L
S
B
A
K
D
T
J
H
O
V
U
C
E
R
N
B
K
W
G
I

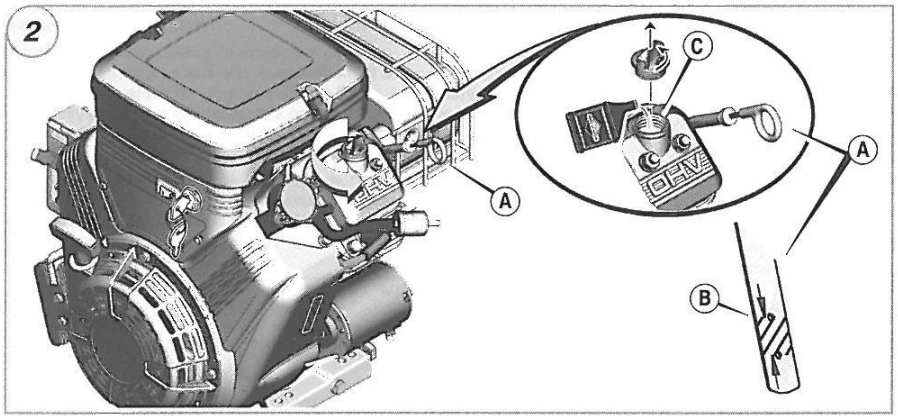
2
A
A
B
C

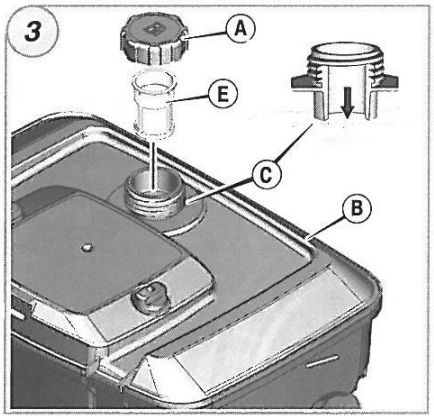
3
A
B
C
E

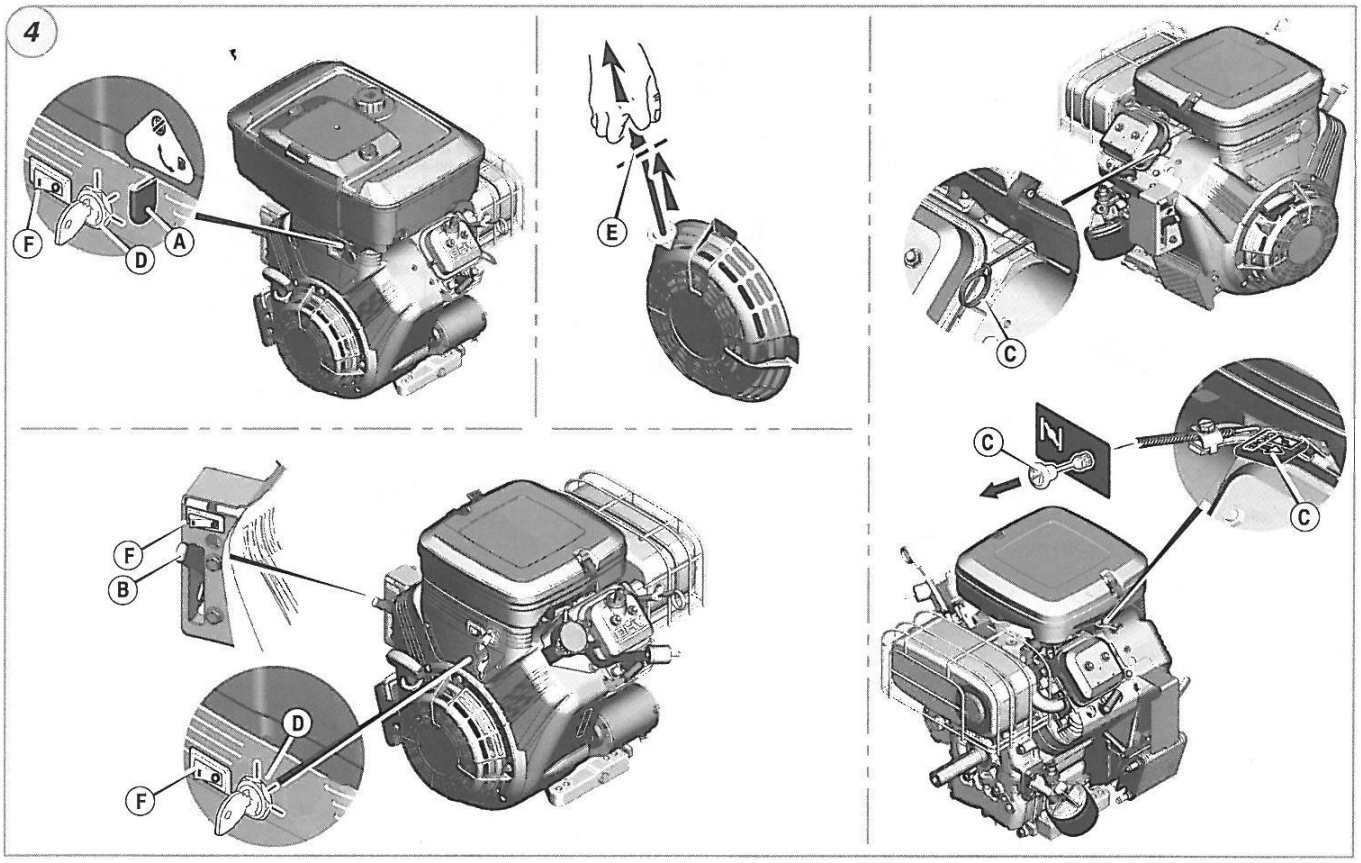
4
A
B
C
D
E
F

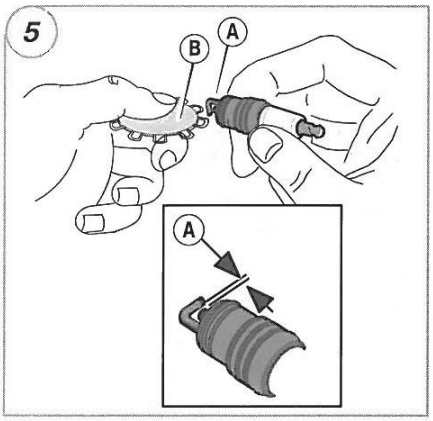
5
A
B

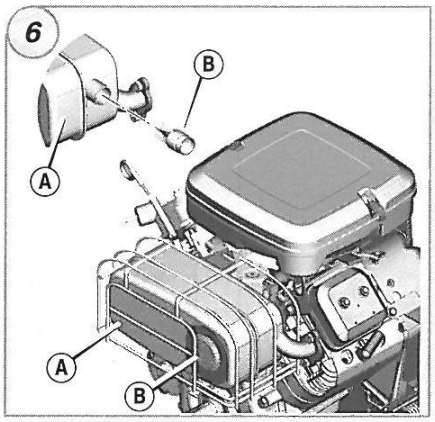
6
A
B

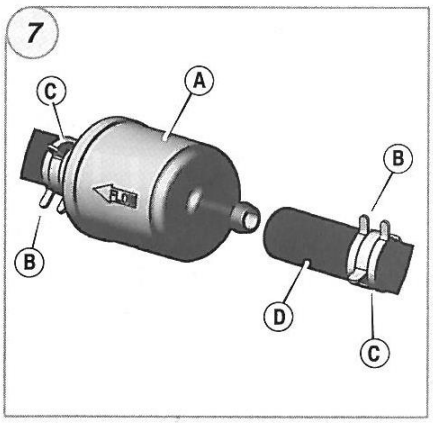
7
A
B
C
D

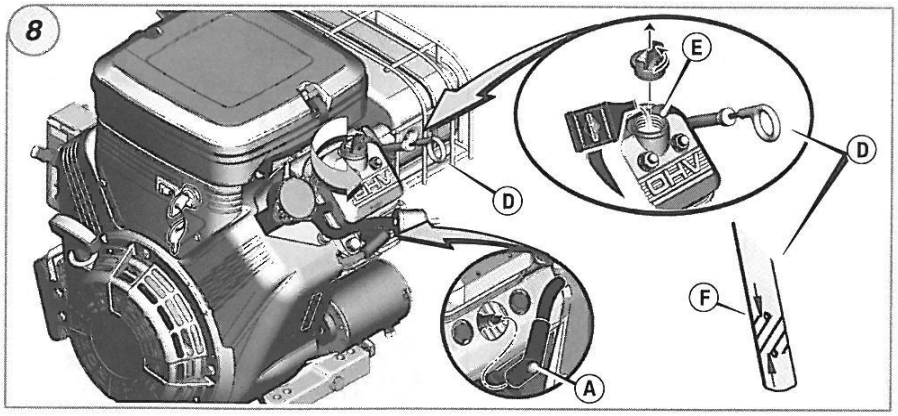
8
E
D
D
F
A

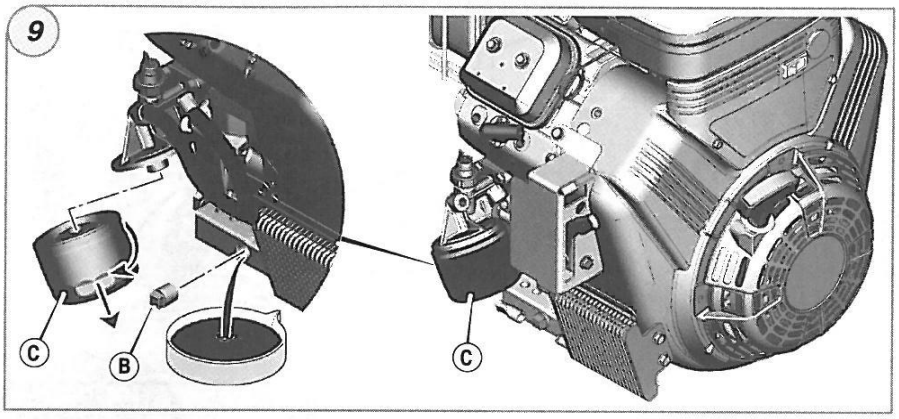
9
C
B
C

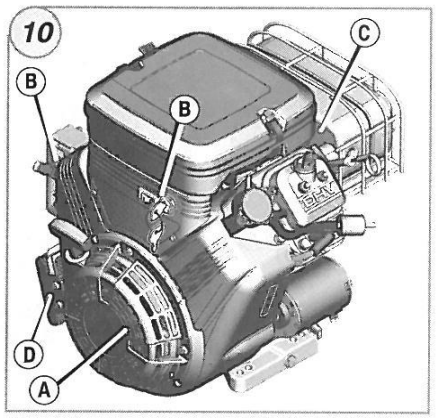
10
C
B
B
D
A

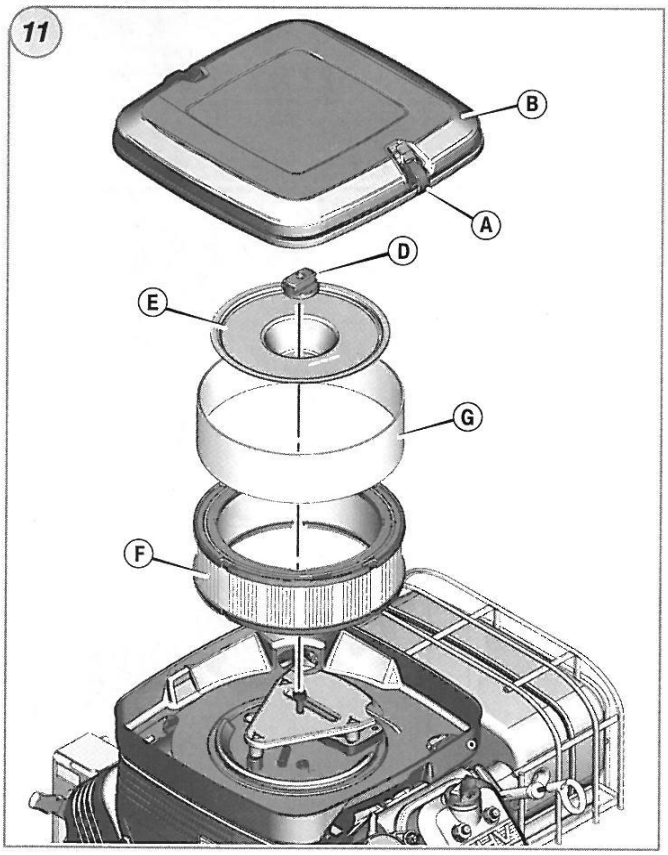
11
B
A
D
E
G
F

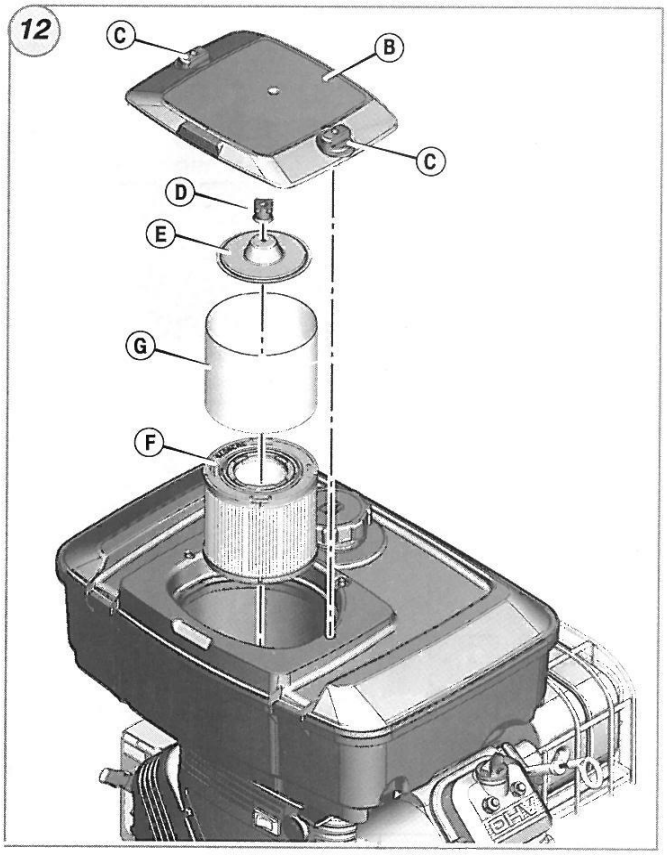
12
C
B
C
D
E
G
F

General Information

This manual contains safety information to make you aware of the hazards and risks associated with engines and how to avoid them. It also contains instructions for the proper use and care of the engine. Because Briggs & Stratton Corporation does not necessarily know what equipment this engine will power, it is important that you read and understand these instructions and the instructions for the equipment. **Save these original instructions for future reference.**

For replacement parts or technical assistance, record below the engine model, type, and code numbers along with the date of purchase. These numbers are located on your engine (see the ***Features and Controls*** page).

Date of purchase: _____
MM/DD/YYYY

Engine model: _____
Model: Type: Code:

Power Rating

The gross power rating for individual gas engine models is labeled in accordance with SAE (Society of Automotive Engineers) code J1940 (Small Engine Power & Torque Rating Procedure), and rating performance has been obtained and corrected in accordance with SAE J1995 (Revision 2002-05). Torque values are derived at 3060 RPM; horsepower values are derived at 3600 RPM. Net power values are taken with exhaust and air cleaner installed whereas gross power values are collected without these attachments. Actual gross engine power will be higher than net engine power and is affected by, among other things, ambient operating conditions and engine-to-engine variability. Given the wide array of products on which engines are placed, the gas engine may not develop the rated gross power when used in a given piece of power equipment. This difference is due to a variety of factors including, but not limited to, the variety of engine components (air cleaner, exhaust, charging, cooling, carburetor, fuel pump, etc.), application limitations, ambient operating conditions (temperature, humidity, altitude), and engine-to-engine variability.
Due to manufacturing and capacity limitations, Briggs & Stratton may substitute an engine of higher rated power for this Series engine.

Operator Safety

SAFETY AND CONTROL SYMBOLS

The safety alert symbol ⚠ is used to identify safety information about hazards that can result in personal injury. A signal word (DANGER, WARNING, or CAUTION) is used with the alert symbol to indicate the likelihood and the potential severity of injury. In addition, a hazard symbol may be used to represent the type of hazard.

⚠ **DANGER** indicates a hazard which, if not avoided, **will result in death or serious injury.**

⚠ **WARNING** indicates a hazard which, if not avoided, **could result in death or serious injury.**

⚠ **CAUTION** indicates a hazard which, if not avoided, **could result in minor or moderate injury.**

NOTICE indicates a situation that **could result in damage to the product.**

⚠ **WARNING**
Certain components in this product and its related accessories contain chemicals known to the State of California to cause cancer, birth defects, or other reproductive harm. Wash hands after handling.

⚠ **WARNING**
The engine exhaust from this product contains chemicals known to the State of California to cause cancer, birth defects, or other reproductive harm.

⚠ **WARNING**
Briggs & Stratton does not approve or authorize the use of these engines on 3-wheel All Terrain Vehicles (ATVs), motor bikes, fun/recreational go-karts, aircraft products, or vehicles intended for use in competitive events. Use of these engines in such applications could result in property damage, serious injury (including paralysis), or even death.

NOTICE: This engine was shipped from Briggs & Stratton without oil. Before you start the engine, make sure you add oil according to the instructions in this manual. If you start the engine without oil, it will be damaged beyond repair and will not be covered under warranty.

⚠ **WARNING**
Fuel and its vapors are extremely flammable and explosive.
Fire or explosion can cause severe burns or death.

When Adding Fuel
- Turn engine off and let engine cool at least 2 minutes before removing the fuel cap.
- Fill fuel tank outdoors or in well-ventilated area.
- Do not overfill fuel tank. To allow for expansion of the fuel, do not fill above the bottom of the fuel tank neck.
- Keep fuel away from sparks, open flames, pilot lights, heat, and other ignition sources.
- Check fuel lines, tank, cap, and fittings frequently for cracks or leaks. Replace if necessary
- If fuel spills, wait until it evaporates before starting engine.

When Starting Engine
- Ensure that spark plug, muffler, fuel cap and air cleaner (if equipped) are in place and secured.
- Do not crank engine with spark plug removed.
- If engine floods, set choke (if equipped) to OPEN/RUN position, move throttle (if equipped) to FAST position and crank until engine starts.

When Operating Equipment
- Do not tip engine or equipment at angle which causes fuel to spill.
- Do not choke the carburetor to stop engine.
- Never start or run the engine with the air cleaner assembly (if equipped) or the air filter (if equipped) removed.

When Changing Oil
- When you drain the oil from the top oil fill tube, the fuel tank must be empty or fuel can leak out and result in a fire or explosion.

When Transporting Equipment
- Transport with fuel tank EMPTY or with fuel shut-off valve OFF.

When Storing Fuel Or Equipment With Fuel In Tank
- Store away from furnaces, stoves, water heaters or other appliances that have pilot lights or other ignition sources because they can ignite fuel vapors.

⚠ **WARNING**
Starting engine creates sparking.
Sparking can ignite nearby flammable gases.
Explosion and fire could result.
- If there is natural or LP gas leakage in area, do not start engine.
- Do not use pressurized starting fluids because vapors are flammable.

WARNING

Engines give off carbon monoxide, an odorless, colorless, poison gas.

Breathing carbon monoxide can cause nausea, fainting or death.

- Start and run engine outdoors.
- Do not start or run engine in enclosed area, even if doors or windows are open.

WARNING

Rapid retraction of starter cord (kickback) will pull hand and arm toward engine faster than you can let go.

Broken bones, fractures, bruises or sprains could result.

- When starting engine, pull the starter cord slowly until resistance is felt and then pull rapidly to avoid kickback.
- Remove all external equipment/engine loads before starting engine.
- Direct-coupled equipment components such as, but not limited to, blades, impellers, pulleys, sprockets, etc., must be securely attached.

WARNING

Rotating parts can contact or entangle hands, feet, hair, clothing, or accessories.

Traumatic amputation or severe laceration can result.

- Operate equipment with guards in place.
- Keep hands and feet away from rotating parts.
- Tie up long hair and remove jewelry.
- Do not wear loose-fitting clothing, dangling drawstrings or items that could become caught.

WARNING

Running engines produce heat. Engine parts, especially muffler, become extremely hot.

Severe thermal burns can occur on contact.

Combustible debris, such as leaves, grass, brush, etc. can catch fire.

- Allow muffler, engine cylinder and fins to cool before touching.
- Remove accumulated debris from muffler area and cylinder area.
- It is a violation of California Public Resource Code, Section 4442, to use or operate the engine on any forest-covered, brush-covered, or grass-covered land unless the exhaust system is equipped with a spark arrester, as defined in Section 4442, maintained in effective working order. Other states or federal jurisdictions may have similar laws. Contact the original equipment manufacturer, retailer, or dealer to obtain a spark arrester designed for the exhaust system installed on this engine.

WARNING

Unintentional sparking can result in fire or electric shock.

Unintentional start-up can result in entanglement, traumatic amputation, or laceration.

Fire hazard

Before performing adjustments or repairs:

- Disconnect the spark plug wire and keep it away from the spark plug.
- Disconnect battery at negative terminal (only engines with electric start.)
- Use only correct tools.
- Do not tamper with governor spring, links or other parts to increase engine speed.
- Replacement parts must be of the same design and installed in the same position as the original parts. Other parts may not perform as well, may damage the unit, and may result in injury.
- Do not strike the flywheel with a hammer or hard object because the flywheel may later shatter during operation.

When testing for spark:

- Use approved spark plug tester.
- Do not check for spark with spark plug removed.

Features and Controls

Compare the illustration (1) with your engine to familiarize yourself with the location of various features and controls.

A. Engine Identification
Model Type Code
B. Spark Plug
C. Air Cleaner (without Fuel Tank)
D. Air Cleaner, (with Fuel Tank)
E. Dipstick
F. Oil Fill
G. Oil Filter (optional)
H. Oil Drain Plug
I. Oil Pressure Sensor
J. Finger Guard
K. Electric Starter
L. Rewind Starter (optional)
M. Carburetor
N. Muffler (optional)
O. Fuel Pump
P. Starter Switch *
Q. Throttle Control *
R. Choke Control *
S. Fuel Filter (optional)
T. Fuel Tank (optional)
U. Fuel Shut Off (optional) *
V. Stop Switch (optional) *
W. Oil Cooler (optional)

* Some engines and equipment have remote controls. See the equipment manual for location and operation of remote controls.

Operation

Oil capacity (see the ***Specifications*** section)

Oil Recommendations

We recommend the use of Briggs & Stratton Warranty Certified oils for best performance. Other high-quality detergent oils are acceptable if classified for service SF, SG, SH, SJ or higher. Do not use special additives.

Outdoor temperatures determine the proper oil viscosity for the engine. Use the chart to select the best viscosity for the outdoor temperature range expected.

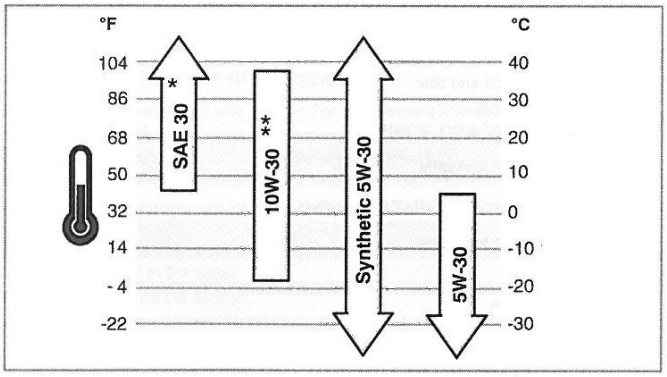

* Below 40°F (4°C) the use of SAE 30 will result in hard starting.

** Above 80°F (27°C) the use of 10W-30 may cause increased oil consumption. Check oil level more frequently.

How To Check/Add Oil - *Figure* (2)

Before adding or checking the oil

- Place engine level.
- Clean the oil fill area of any debris.

1. Remove the dipstick (**A**) and wipe with a clean cloth (Figure 2).
2. Fully insert the dipstick.
3. Remove the dipstick and check the oil level. It should be at the top of the full indicator (**B**) on the dipstick.
4. If low, add oil slowly into the engine oil fill (**C**). **Do not overfill.** After adding oil, wait one minute and then recheck the oil level.
5. Fully insert the dipstick.

Oil Pressure

If the oil pressure is too low, a pressure switch (if equipped) will either stop the engine or activate a warning device on the equipment. If this occurs, stop the engine and check the oil level with the dipstick.

If the oil level is below the ADD mark, add oil until it reaches the FULL mark. Start the engine and check for proper pressure before continuing to operate.

If the oil level is between the ADD and FULL marks, **do not start** the engine. Contact an Authorized Briggs & Stratton Dealer to have the oil pressure problem corrected.

Fuel Recommendations

Fuel must meet these requirements:

- Clean, fresh, unleaded gasoline.
- A minimum of 87 octane/87 AKI (91 RON). High altitude use, see below.
- Gasoline with up to 10% ethanol (gasohol) is acceptable.

CAUTION: Do not use unapproved gasolines, such as E15 and E85. Do not mix oil in gasoline or modify the engine to run on alternate fuels. This will damage the engine components and **void the engine warranty.**

To protect the fuel system from gum formation, mix a fuel stabilizer into the fuel. See ***Storage.*** All fuel is not the same. If starting or performance problems occur, change fuel providers or change brands. This engine is certified to operate on gasoline. The emissions control system for this engine is EM (Engine Modifications).

High Altitude

At altitudes over 5,000 feet (1524 meters), a minimum 85 octane/85 AKI (89 RON) gasoline is acceptable. To remain emissions compliant, high altitude adjustment is required. Operation without this adjustment will cause decreased performance, increased fuel consumption, and increased emissions. See a Briggs & Stratton Authorized Dealer for high altitude adjustment information.

Operation of the engine at altitudes below 2,500 feet (762 meters) with the high altitude kit is not recommended.

How To Add Fuel - *Figure* (3)

WARNING

Fuel and its vapors are extremely flammable and explosive.
Fire or explosion can cause severe burns or death.

When Adding Fuel

- Turn engine off and let engine cool at least 2 minutes before removing the fuel cap.
- Fill fuel tank outdoors or in well-ventilated area.
- Do not overfill fuel tank. To allow for expansion of the fuel, do not fill above the bottom of the fuel tank neck.
- Keep fuel away from sparks, open flames, pilot lights, heat, and other ignition sources.
- Check fuel lines, tank, cap, and fittings frequently for cracks or leaks. Replace if necessary
- If fuel spills, wait until it evaporates before starting engine.

1. Clean the fuel cap area of dirt and debris. Remove the fuel cap (**A**, Figure 3).
2. Fill the fuel tank (**B**) with fuel. To allow for expansion of the fuel, do not fill above the bottom of the fuel tank neck (**C**).
3. Reinstall the fuel cap.

How To Start The Engine - *Figure* (4)

WARNING

Rapid retraction of starter cord (kickback) will pull hand and arm toward engine faster than you can let go.
Broken bones, fractures, bruises or sprains could result.

- When starting engine, pull the starter cord slowly until resistance is felt and then pull rapidly to avoid kickback.

WARNING

Fuel and its vapors are extremely flammable and explosive.
Fire or explosion can cause severe burns or death.

When Starting Engine

- Ensure that spark plug, muffler, fuel cap and air cleaner (if equipped) are in place and secured.
- Do not crank engine with spark plug removed.
- If engine floods, set choke (if equipped) to OPEN/RUN position, move throttle (if equipped) to FAST position and crank until engine starts.

WARNING

Engines give off carbon monoxide, an odorless, colorless, poison gas.
Breathing carbon monoxide can cause nausea, fainting or death.

- Start and run engine outdoors.
- Do not start or run engine in enclosed area, even if doors or windows are open.

NOTICE: This engine was shipped from Briggs & Stratton without oil. Before you start the engine, make sure you add oil according to the instructions in this manual. If you start the engine without oil, it will be damaged beyond repair and will not be covered under warranty.

Note: Some engines and equipment have remote controls. See the equipment manual for location and operation of remote controls.

1. Check the oil level. See the ***How To Check/Add Oil*** section.
2. Make sure equipment drive controls, if equipped, are disengaged.
3. Turn the fuel shut-off valve (**A**), if equipped, to the on position (Figure 4).
4. Push the stop switch (**F**), if equipped, to the on position.
5. Move the throttle control (**B**) to the fast position. Operate the engine in the fast position.
6. Move the choke control (**C**) to the choke position.
   Note: Choke is usually unnecessary when restarting a warm engine.
7. **Rewind Start:** Turn the key switch (**D**), if equipped, to the run position.
8. **Rewind Start:** Firmly hold the starter cord handle (**E**). Pull the starter cord handle slowly until resistance is felt, then pull rapidly.
   Note: If the engine does not start after repeated attempts, go to **VanguardEngines.com** or call **1-800-999-9333** (in USA).

WARNING: Rapid retraction of the starter cord (kickback) will pull your hand and arm toward the engine faster than you can let go. Broken bones, fractures, bruises or sprains could result. When starting engine, pull the starter cord slowly until resistance is felt and then pull rapidly to avoid kickback.

9. **Electric Start:** Turn the electric start switch (**D**) to the on/start position.
   Note: If the engine does not start after repeated attempts, go to **VanguardEngines.com** or call **1-800-999-9333** (in USA).
   NOTICE: To extend the life of the starter, use short starting cycles (five seconds maximum). Wait one minute between starting cycles.
10. As the engine warms up, move the choke control (**C**) to the run position.

How To Stop The Engine - *Figure* 4

WARNING

Fuel and its vapors are extremely flammable and explosive.
Fire or explosion can cause severe burns or death.

- Do not choke the carburetor to stop engine.

1. With the throttle control (**B**) in the slow position, turn the key switch (**D**) to the off position (Figure 4). Remove the key and keep in a safe place out of the reach of children.
2. Push the stop switch (**F**) to the off position.
3. After the engine stops, turn the fuel shut-off valve (**A**), if equipped, to the closed position.

Maintenance

We recommend that you see any Briggs & Stratton Authorized Dealer for all maintenance and service of the engine and engine parts.

NOTICE: All the components used to build this engine must remain in place for proper operation.

Emissions Control

Maintenance, replacement, or repair of the emissions control devices and systems may be performed by any non-road engine repair establishment or individual. However, to obtain "no charge" emissions control service, the work must be performed by a factory authorized dealer. See the Emissions Warranty.

WARNING

Unintentional sparking can result in fire or electric shock.
Unintentional start-up can result in entanglement, traumatic amputation, or laceration.
Fire hazard

Before performing adjustments or repairs:

- Disconnect the spark plug wire and keep it away from the spark plug.
- Disconnect battery at negative terminal (only engines with electric start.)
- Use only correct tools.
- Do not tamper with governor spring, links or other parts to increase engine speed.
- Replacement parts must be of the same design and installed in the same position as the original parts. Other parts may not perform as well, may damage the unit, and may result in injury.
- Do not strike the flywheel with a hammer or hard object because the flywheel may later shatter during operation.

When testing for spark:

- Use approved spark plug tester.
- Do not check for spark with spark plug removed.

Maintenance Chart

First 5 Hours
• Change oil
Every 8 Hours or Daily
• Check engine oil level • Clean area around muffler and controls
Every 100 Hours or Annually
• Clean or change air filter * • Clean pre-cleaner (if equipped) * • Change engine oil and filter • Replace spark plug • Check muffler and spark arrester
Every 250 Hours or Annually
• Check valve clearance. Adjust if necessary.
Every 400 Hours or Annually
• Change air filter • Replace fuel filter • Clean air cooling system * • Clean oil cooler fins *

* In dusty conditions or when airborne debris is present, clean more often.

Carburetor Adjustment

Never make adjustments to the carburetor. The carburetor was set at the factory to operate efficiently under most conditions. However, if adjustments are required, see a Briggs & Stratton Authorized Dealer for service.

NOTICE: The manufacturer of the equipment on which this engine is installed specifies the top speed at which the engine will be operated. **Do not exceed** this speed.

How To Replace The Spark Plug - *Figure* 5

Check the gap (**A**, Figure 5) with a wire gauge (**B**). If necessary, reset the gap. Install and tighten the spark plug to the recommended torque. For gap setting or torque, see the ***Specifications*** section.

Note: In some areas, local law requires using a resistor spark plug to suppress ignition signals. If this engine was originally equipped with a resistor spark plug, use the same type for replacement.

Inspect Muffler And Spark Arrester - *Figure* 6

WARNING

Running engines produce heat. Engine parts, especially muffler, become extremely hot.

Severe thermal burns can occur on contact.

Combustible debris, such as leaves, grass, brush, etc. can catch fire.

- Allow muffler, engine cylinder and fins to cool before touching.
- Remove accumulated debris from muffler area and cylinder area.
- It is a violation of California Public Resource Code, Section 4442, to use or operate the engine on any forest-covered, brush-covered, or grass-covered land unless the exhaust system is equipped with a spark arrester, as defined in Section 4442, maintained in effective working order. Other states or federal jurisdictions may have similar laws. Contact the original equipment manufacturer, retailer, or dealer to obtain a spark arrester designed for the exhaust system installed on this engine.

Remove accumulated debris from muffler area and cylinder area. Inspect the muffler (**A**, Figure 6) for cracks, corrosion, or other damage. Remove the spark arrester (**B**), if equipped, and inspect for damage or carbon blockage. If damage is found, install replacement parts before operating.

WARNING: Replacement parts must be of the same design and installed in the same position as the original parts. Other parts may not perform as well, may damage the unit, and may result in injury.

How To Change The Oil - *Figure* 8 9

Used oil is a hazardous waste product and must be disposed of properly. Do not discard with household waste. Check with your local authorities, service center, or dealer for safe disposal/recycling facilities.

Remove Oil

1. With engine off but still warm, disconnect the spark plug wire (**A**) and keep it away from the spark plug (Figure 8).
2. Remove the oil drain plug (**B**, Figure 9). Drain the oil into an approved container.
3. After the oil has drained, install and tighten the oil drain plug.

Change The Oil Filter (if equipped)

Some models are equipped with oil filter. For replacement intervals, see the ***Maintenance*** chart.

1. Drain the oil from the engine. See ***Remove Oil*** section.
2. Remove the oil filter (**C**) and dispose of properly. See Figure 9.
3. Before you install the new oil filter, lightly lubricate the oil filter gasket with fresh, clean oil.
4. Install the oil filter by hand until the gasket contacts the oil filter adapter, then tighten the oil filter 1/2 to 3/4 turns.
5. Add oil. See ***Add Oil*** section.
6. Start and run the engine. As the engine warms up, check for oil leaks.
7. Stop the engine and check the oil level. It should be at the top of the full indicator (**F**) on the dipstick (Figure 8).

Add Oil

- Place engine level.
- Clean the oil fill area of any debris.
- See the ***Specifications*** section for oil capacity.

1. Remove the dipstick (**D**) and wipe with a clean cloth (Figure 8).
2. Pour the oil slowly into the engine oil fill (**E**). **Do not overfill.** After adding oil, wait one minute and then check the oil level.
3. Install and tighten the dipstick.
4. Remove the dipstick and check the oil level. It should be at the top of the full indicator (**F**) on the dipstick.
5. Install and tighten the dipstick.

How To Service The Air Filter - *Figure* 11 12

WARNING

Fuel and its vapors are extremely flammable and explosive.

Fire or explosion can cause severe burns or death.

- Never start or run the engine with the air cleaner assembly (if equipped) or the air filter (if equipped) removed.

NOTICE: Do not use pressurized air or solvents to clean the filter. Pressurized air can damage the filter and solvents will dissolve the filter.

Two types of air filter sytems are shown. See the ***Maintenance Chart*** for service requirements.

1. **Models without Fuel Tank:** Open the latches (**A**) and remove the cover (**B**). See Figure 11.
2. **Models with Fuel Tank:** Remove the knob (**C**) and the cover (**B**). See Figure 12.
3. Remove the nut (**D**) and the retainer (**E**). See Figure 11 and 12.
4. Remove the air filter (**F**).
5. Remove the pre-cleaner (**G**), if equipped, from the air filter.
6. To loosen debris, gently tap the air filter on a hard surface. If the air filter is excessively dirty, replace with a new air filter.
7. Wash the pre-cleaner in liquid detergent and water. Then allow it to thoroughly air dry. **Do not** oil the pre-cleaner.
8. Assemble the dry pre-cleaner to the air filter.
9. Install the air filter and secure with retainer and nut.
10. Install and secure the cover.

How To Replace The Fuel Filter - *Figure* 7

WARNING

Fuel and its vapors are extremely flammable and explosive.

Fire or explosion can cause severe burns or death.

- Keep fuel away from sparks, open flames, pilot lights, heat, and other ignition sources.
- Check fuel lines, tank, cap, and fittings frequently for cracks or leaks. Replace if necessary.
- Before replacing the fuel filter, drain the fuel tank or close the fuel shut-off valve.
- Replacement parts must be the same and installed in the same position as the original parts.
- If fuel spills, wait until it evaporates before starting engine.

1. Before replacing the fuel filter (**A,** Figure 7), if equipped, drain the fuel tank or close the fuel shut-off valve. Otherwise, fuel can leak out and cause a fire or explosion.
2. Use pliers to squeeze tabs (**B**) on the clamps (**C**), then slide the clamps away from the fuel filter. Twist and pull the fuel lines (**D**) off the fuel filter.
3. Check the fuel lines for cracks or leaks. Replace if necessary.
4. Replace the fuel filter with an original equipment replacement filter.
5. Secure the fuel lines with the clamps as shown.

Note: Engines equipped with a factory mounted fuel tank may have a fuel tank strainer (**E**), see Figure 3.

How To Clean The Air Cooling System - *Figure* 10

WARNING

Running engines produce heat. Engine parts, especially muffler, become extremely hot.

Severe thermal burns can occur on contact.

Combustible debris, such as leaves, grass, brush, etc. can catch fire.

- Allow muffler, engine cylinder and fins to cool before touching.
- Remove accumulated debris from muffler area and cylinder area.

NOTICE: Do not use water to clean the engine. Water could contaminate the fuel system. Use a brush or dry cloth to clean the engine.

This is an air cooled engine. Dirt or debris can restrict air flow and cause the engine to overheat, resulting in poor performance and reduced engine life.

Use a brush or dry cloth to remove debris from the finger guard (**A**). Keep linkage, springs and controls (**B**) clean. Keep the area around and behind the muffler (**C**) free of any combustible debris (Figure 10). Make sure that the oil cooler fins (**D**) are free of dirt and debris.

Storage

WARNING

Fuel and its vapors are extremely flammable and explosive.
Fire or explosion can cause severe burns or death.

When Storing Fuel Or Equipment With Fuel In Tank

- Store away from furnaces, stoves, water heaters or other appliances that have pilot lights or other ignition sources because they can ignite fuel vapors.

Fuel System

Fuel can become stale when stored over 30 days. Stale fuel causes acid and gum deposits to form in the fuel system or on essential carburetor parts. To keep fuel fresh, use Briggs & Stratton FRESH START® fuel stabilizer, available as a liquid additive or a drip concentrate cartridge.

There is no need to drain gasoline from the engine if a fuel stabilizer is added according to instructions. Run the engine for 2 minutes to circulate the stabilizer throughout the fuel system. The engine and fuel can then be stored up to 24 months.

If gasoline in the engine has not been treated with a fuel stabilizer, it must be drained into an approved container. Run the engine until it stops from lack of fuel. The use of a fuel stabilizer in the storage container is recommended to maintain freshness.

Engine Oil

While the engine is still warm, change the engine oil.

Troubleshooting

Need Assistance? Go to **VanguardEngines.com** or call **1-800-999-9333**.

Specifications

Engine Specifications	
Model	290000
Displacement	29.23 ci (479 cc)
Bore	2.677 in (68 mm)
Stroke	2.598 in (66 mm)
Oil Capacity	46 - 48 oz (1.36 - 1.42 L)

Engine Specifications	
Model	350000
Displacement	34.78 ci (570 cc)
Bore	2.835 in (72 mm)
Stroke	2.756 in (70 mm)
Oil Capacity	46 - 48 oz (1.36 - 1.42 L)

Engine Specifications	
Model	300000
Displacement	29.23 ci (479 cc)
Bore	2.677 in (68 mm)
Stroke	2.598 in (66 mm)
Oil Capacity	46 - 48 oz (1.36 - 1.42 L)

Engine Specifications	
Model	380000
Displacement	38.26 ci (627 cc)
Bore	2.972 in (75.5 mm)
Stroke	2.756 in (70 mm)
Oil Capacity	46 - 48 oz (1.36 - 1.42 L)

Tune-up Specifications *	
Model	290000, 300000
Spark Plug Gap	0.030 in (0.76 mm)
Spark Plug Torque	180 lb-in (20 Nm)
Armature Air Gap	0.008 - 0.012 in (0.20 - 0.30 mm)
Intake Valve Clearance	0.004 - 0.006 in (0.10 - 0.15 mm)
Exhaust Valve Clearance	0.004 - 0.006 in (0.10 - 0.15 mm)

Tune-up Specifications *	
Model	350000, 380000
Spark Plug Gap	0.030 in (0.76 mm)
Spark Plug Torque	180 lb-in (20 Nm)
Armature Air Gap	0.008 - 0.012 in (0.20 - 0.30 mm)
Intake Valve Clearance	0.004 - 0.006 in (0.10 - 0.15 mm)
Exhaust Valve Clearance	0.004 - 0.006 in (0.10 - 0.15 mm)

* Engine power will decrease 3.5% for each 1,000 feet (300 meters) above sea level and 1% for each 10° F (5.6° C) above 77° F (25° C). The engine will operate satisfactorily at an angle up to 15°. Refer to the equipment operator's manual for safe allowable operating limits on slopes.

Common Service Parts

Service Part	Part Number
Air Filter - with fuel tank	393957
Air Filter - except model 380000	394018
Air Filter - model 380000	692519
Air Filter Pre-cleaner - with fuel tank	271794
Air Filter Pre-cleaner - except model 380000	272490
Air Filter Pre-cleaner - model 380000	692520
Oil - SAE 30	100028
Oil Filter - 6 cm long	492932
Oil Filter - 9 cm long	491056

Service Part	Part Number
Fuel Filter - with fuel tank	808116
Fuel Filter - with fuel pump	691035
Fuel Filter - without fuel pump	298090
Fuel Additive	5041
Resistor Spark Plug	491055
Long Life Platinum Spark Plug	5066
Spark Plug Wrench	19374
Spark Tester	19368

We recommend that you see any Briggs & Stratton Authorized Dealer for all maintenance and service of the engine and engine parts.

BRIGGS & STRATTON ENGINE OWNER WARRANTY POLICY

July 2010

LIMITED WARRANTY

Briggs & Stratton Corporation will repair or replace, free of charge, any part(s) of the engine that is defective in material or workmanship or both. Transportation charges on product submitted for repair or replacement under this warranty must be borne by purchaser. This warranty is effective for and is subject to the time periods and conditions stated below. For warranty service, find the nearest Authorized Service Dealer in our dealer locator map at BRIGGSandSTRATTON.COM, or by calling 1-800-233-3723, or as listed in the 'Yellow Pages'.

There is no other expressed warranty. Implied warranties, including those of merchantability and fitness for a particular purpose, are limited to one year from purchase, or to the extent permitted by law. All other implied warranties are excluded. Liability for incidental or consequential damages are excluded to the extent exclusion is permitted by law. Some states or countries do not allow limitations on how long an implied warranty lasts, and some states or countries do not allow the exclusion or limitation of incidental or consequential damages, so the above limitation and exclusion may not apply to you. This warranty gives you specific legal rights and you may also have other rights which vary from state to state and country to country.

STANDARD WARRANTY TERMS * ▲

Brand/Product Type	Consumer Use	Commercial Use
Vanguard™ ■	3 years	3 years
Extended Life Series™; I/C®; Intek™ I/C®; Intek™ Pro; Commercial Turf Series™ Professional Series™ with Dura-Bore™ Cast Iron Sleeve; 850 Series™ with Dura-Bore™ Cast Iron Sleeve; Snow Series MAX™ with Dura-Bore™ Cast Iron Sleeve All Other Briggs & Stratton Engines Featuring Dura-Bore™ Cast Iron Sleeve	2 years	1 year
All Other Briggs & Stratton Engines	2 years	90 days

* These are our standard warranty terms, but occasionally there may be additional warranty coverage that was not determined at time of publication. For a listing of current warranty terms for your engine, go to BRIGGSandSTRATTON.COM or contact your Authorized Briggs & Stratton Service Dealer.

▲ Home Standby Generator applications: 2 years consumer warranty only. No commercial warranty. This warranty does not apply to engines on equipment used for prime power in place of a utility. **Engines used in competitive racing or on commercial or rental tracks are not warranted.**

■ Vanguard installed on standby generators: 2 years consumer use, no warranty commercial use. Vanguard installed on utility vehicles: 2 years consumer use, 2 years commercial use. Vanguard 3-cylinder liquid cooled: see Briggs & Stratton 3/LC Engine Owner Warranty Policy.

The warranty period begins on the date of purchase by the first retail consumer or commercial end user, and continues for the period of time stated in the table above. "Consumer use" means personal residential household use by a retail consumer. "Commercial use" means all other uses, including use for commercial, income producing or rental purposes. Once an engine has experienced commercial use, it shall thereafter be considered as a commercial use engine for purposes of this warranty.

No warranty registration is necessary to obtain warranty on Briggs & Stratton Products. Save your proof of purchase receipt. If you do not provide proof of the initial purchase date at the time warranty service is requested, the manufacturing date of the product will be used to determine the warranty period.

About Your Warranty

Briggs & Stratton welcomes warranty repair and apologizes to you for being inconvenienced. Any Authorized Service Dealer may perform warranty repairs. Most warranty repairs are handled routinely, but sometimes requests for warranty service may not be appropriate.

If a customer differs with the decision of the Service Dealer, an investigation will be made to determine whether the warranty applies. Ask the Service Dealer to submit all supporting facts to his Distributor or the Factory for review. If the Distributor or the Factory decides that the claim is justified, the customer will be fully reimbursed for those items that are defective. To avoid misunderstanding which might occur between the customer and the Dealer, listed below are some of the causes of engine failure that the warranty does not cover.

Normal wear: Engines, like all mechanical devices, need periodic parts service and replacement to perform well. Warranty will not cover repair when normal use has exhausted the life of a part or an engine. Warranty would not apply if engine damage occurred because of misuse, lack of routine maintenance, shipping, handling, warehousing or improper installation. Similarly, warranty is void if the serial number of the engine has been removed or the engine has been altered or modified.

Improper maintenance: The life of an engine depends upon the conditions under which it operates, and the care it receives. Some applications, such as tillers, pumps and rotary mowers, are very often used in dusty or dirty conditions, which can cause what appears to be premature wear. Such wear, when caused by dirt, dust, spark plug cleaning grit, or other abrasive material that has entered the engine because of improper maintenance, is not covered by warranty.

This warranty covers engine related defective material and/or workmanship only, and not replacement or refund of the equipment to which the engine may be mounted. Nor does the warranty extend to repairs required because of:

1 **Problems caused by parts that are not original Briggs & Stratton parts.**

2 Equipment controls or installations that prevent starting, cause unsatisfactory engine performance, or shorten engine life. (Contact equipment manufacturer.)

3 Leaking carburetors, clogged fuel pipes, sticking valves, or other damage, caused by using contaminated or stale fuel.

4 Parts which are scored or broken because an engine was operated with insufficient or contaminated lubricating oil, or an incorrect grade of lubricating oil (check and refill when necessary, and change at recommended intervals). OIL GARD may not shut down running engine. Engine damage may occur if oil level is not properly maintained.

5 Repair or adjustment of associated parts or assemblies such as clutches, transmissions, remote controls, etc., which are not manufactured by Briggs & Stratton.

6 Damage or wear to parts caused by dirt, which entered the engine because of improper air cleaner maintenance, re-assembly, or use of a non-original air cleaner element or cartridge. At recommended intervals, clean and/or replace the filter as stated in the Operator's Manual.

7 Parts damaged by over-speeding, or overheating caused by grass, debris, or dirt, which plugs or clogs the cooling fins, or flywheel area, or damage caused by operating the engine in a confined area without sufficient ventilation. Clean engine debris at recommended intervals as stated in the Operator's Manual.

8 Engine or equipment parts broken by excessive vibration caused by a loose engine mounting, loose cutter blades, unbalanced blades or loose or unbalanced impellers, improper attachment of equipment to engine crankshaft, over-speeding or other abuse in operation.

9 A bent or broken crankshaft, caused by striking a solid object with the cutter blade of a rotary lawn mower, or excessive v-belt tightness.

10 Routine tune-up or adjustment of the engine.

11 Engine or engine component failure, i.e., combustion chamber, valves, valve seats, valve guides, or burned starter motor windings, caused by the use of alternate fuels such as, liquified petroleum, natural gas, altered gasolines, etc.

Warranty service is available only through authorized service dealers by Briggs & Stratton Corporation. Locate your nearest Authorized Service Dealer in our dealer locator map on BRIGGSandSTRATTON.COM or by calling 1-800-233-3723, or as listed in the 'Yellow Pages'.

California, U.S. EPA, and Briggs & Stratton Corporation Emissions Control Warranty Statement
Your Warranty Rights And Obligations

January 2011

The California Air Resources Board, U.S. EPA, and Briggs & Stratton (B&S) are pleased to explain the emissions control system warranty on your Model Year 2011-2012 engine/equipment. In California, new small off-road engines and large spark ignited engines less than or equal to 1.0 liter must be designed, built, and equipped to meet the State's stringent anti-smog standards. B&S must warrant the emissions control system on your engine/equipment for the periods of time listed below provided there has been no abuse, neglect, or improper maintenance of your engine or equipment.

Your emissions control system may include parts such as the carburetor or fuel injection system, fuel tank, ignition system, and catalytic converter. Also included may be hoses, belts, connectors, sensors, and other emissions-related assemblies.

Where a warrantable condition exists, B&S will repair your engine/equipment at no cost to you including diagnosis, parts, and labor.

Manufacturer's Warranty Coverage:

Small off-road engines and large spark ignited engines less than or equal to 1.0 liter are warranted for three years. If any emissions-related part on your engine/equipment is defective, the part will be repaired or replaced by B&S.

Owner's Warranty Responsibilities:

- As the engine/equipment owner, you are responsible for the performance of the required maintenance listed in your owner's manual. B&S recommends that you retain all receipts covering maintenance on your engine/equipment, but B&S cannot deny warranty solely for the lack of receipts or your failure to ensure the performance of all scheduled maintenance.
- As the engine/equipment owner, you should however be aware that B&S may deny you warranty coverage if your engine/equipment or a part has failed due to abuse, neglect, improper maintenance, or unapproved modifications.
- You are responsible for presenting your engine/equipment to a B&S distribution center, servicing dealer, or other equivalent entity, as applicable, as soon as a problem exists. The warranty repairs should be completed in a reasonable amount of time, not to exceed 30 days. If you have any questions regarding your warranty rights and responsibilities, you should contact B&S at (414) 259-5262.

Briggs & Stratton Emissions Control Warranty Provisions

The following are specific provisions relative to your Emissions Control Warranty Coverage. It is in addition to the B&S engine warranty for non-regulated engines found in the Operator's Manual.

1. Warranted Emissions Parts

   Coverage under this warranty extends only to the parts listed below (the emissions control systems parts) to the extent these parts were present on the engine purchased.

   a. Fuel Metering System
      - Cold start enrichment system (soft choke)
      - Carburetor and internal parts
      - Fuel pump
      - Fuel line, fuel line fittings, clamps
      - Fuel tank, cap and tether
      - Carbon canister

   b. Air Induction System
      - Air cleaner
      - Intake manifold
      - Purge and vent line

   c. Ignition System
      - Spark plug(s)
      - Magneto ignition system

   d. Catalyst System
      - Catalytic converter
      - Exhaust manifold
      - Air injection system or pulse valve

   e. Miscellaneous Items Used in Above Systems
      - Vacuum, temperature, position, time sensitive valves and switches
      - Connectors and assemblies

2. Length of Coverage

   For a period of three years from date of original purchase, B&S warrants to the original purchaser and each subsequent purchaser that the engine is designed, built, and equipped so as to conform with all applicable regulations adopted by the Air Resources Board; that it is free from defects in material and workmanship that could cause the failure of a warranted part; and that it is identical in all material respects to the engine described in the manufacturer's application for certification. The warranty period begins on the date the engine is originally purchased.

   The warranty on emissions-related parts is as follows:

   - Any warranted part that is not scheduled for replacement as required maintenance in the owner's manual supplied, is warranted for the warranty period stated above. If any such part fails during the period of warranty coverage, the part will be repaired or replaced by B&S at no charge to the owner. Any such part repaired or replaced under the warranty will be warranted for the remaining warranty period.
   - Any warranted part that is scheduled only for regular inspection in the owner's manual supplied, is warranted for the warranty period stated above. Any such part repaired or replaced under warranty will be warranted for the remaining warranty period.
   - Any warranted part that is scheduled for replacement as required maintenance in the owner's manual supplied, is warranted for the period of time prior to the first scheduled replacement point for that part. If the part fails prior to the first scheduled replacement, the part will be repaired or replaced by B&S at no charge to the owner. Any such part repaired or replaced under warranty will be warranted for the remainder of the period prior to the first scheduled replacement point for the part.
   - Add on or modified parts that are not exempted by the Air Resources Board may not be used. The use of any non exempted add on or modified parts by the owner will be grounds for disallowing a warranty claim. The manufacturer will not be liable to warrant failures of warranted parts caused by the use of a non exempted add on or modified part.

3. Consequential Coverage

   Coverage shall extend to the failure of any engine components caused by the failure of any warranted emissions parts.

4. Claims and Coverage Exclusions

   Warranty claims shall be filed according to the provisions of the B&S engine warranty policy. Warranty coverage does not apply to failures of emissions parts that are not original equipment B&S parts or to parts that fail due to abuse, neglect, or improper maintenance as set forth in the B&S engine warranty policy. B&S is not liable for warranty coverage of failures of emissions parts caused by the use of add-on or modified parts.

Look For Relevant Emissions Durability Period and Air Index Information On Your Small Off-Road Engine Emissions Label

Engines that are certified to meet the California Air Resources Board (CARB) small off-road Emissions Standard must display information regarding the Emissions Durability Period and the Air Index. Briggs & Stratton makes this information available to the consumer on our emissions labels. The engine emissions label will indicate certification information.

The **Emissions Durability Period** describes the number of hours of actual running time for which the engine is certified to be emissions compliant, assuming proper maintenance in accordance with the Operating & Maintenance Instructions. The following categories are used:

Moderate:
Engine is certified to be emissions compliant for 125 hours of actual engine running time.

Intermediate:
Engine is certified to be emissions compliant for 250 hours of actual engine running time.

Extended:
Engine is certified to be emissions compliant for 500 hours of actual engine running time.

For example, a typical walk-behind lawn mower is used 20 to 25 hours per year. Therefore, the **Emissions Durability Period** of an engine with an **intermediate** rating would equate to 10 to 12 years.

Briggs & Stratton engines are certified to meet the United States Environmental Protection Agency (USEPA) Phase 2 emissions standards. For Phase 2 certified engines, the Emissions Compliance Period referred to on the Emissions Compliance label indicates the number of operating hours for which the engine has been shown to meet Federal emissions requirements.

For engines less than 225 cc displacement.
Category C = 125 hours, Category B = 250 hours, Category A = 500 hours

For engines of 225 cc or more displacement.
Category C = 250 hours, Category B = 500 hours, Category A = 1000 hours