Existing Motors - MCC 1								
Lineset #	**Motor #**	**Description**	**HP**	**Capacity**	**Max Speed**	**Fixed/Variable**	**Voltage**	**Gearbox**
3	1	Legs #1	3	1000 LB	60 FPM	Variable	480Y VAC	Nord SK32100AZB-100L/4
4	2	Electric #1	3	2000 LB	30 FPM	Variable	480Y VAC	Nord SK32100AZB-100L/4
5	3	General Purpose	7.5	1750 LB	120 FPM	Variable	480Y VAC	Nord SK32100AZB-132S/4
6	4	General Purpose	7.5	1750 LB	120 FPM	Variable	480Y VAC	Nord SK32100AZB-132S/4
7	5	Acoustical Cloud #1	3	2000 LB	30 FPM	Variable	480Y VAC	Nord SK32100AZB-100L/4
9	6	Legs #2	3	1000 LB	60 FPM	Variable	480Y VAC	Nord SK32100AZB-100L/4
10	7	Electric #2	3	2000 LB	30 FPM	Variable	480Y VAC	Nord SK32100AZB-100L/4
11	8	General Purpose	7.5	1750 LB	120 FPM	Variable	480Y VAC	Nord SK32100AZB-132S/4
12	9	General Purpose	7.5	1750 LB	120 FPM	Variable	480Y VAC	Nord SK32100AZB-132S/4
13	10	Acoustical Cloud #2	3	2000 LB	30 FPM	Variable	480Y VAC	Nord SK32100AZB-100L/4
15	11	Midstage Traveller	7.5	1750 LB	120 FPM	Variable	480Y VAC	Nord SK32100AZB-132S/4
Existing Motors - MCC 2								
Lineset #	**Motor #**		**HP**	**Capacity**	**Speed**	**Fixed**	**Voltage**	**Gearbox**
16	12	Legs #3	3	1000 LB	60 FPM	Variable	480Y VAC	Nord SK32100AZB-100L/4
17	13	Electric #3	3	2000 LB	30 FPM	Variable	480Y VAC	Nord SK32100AZB-100L/4
18	14	General Purpose	7.5	1750 LB	120 FPM	Variable	480Y VAC	Nord SK32100AZB-132S/4
19	15	General Purpose	7.5	1750 LB	120 FPM	Variable	480Y VAC	Nord SK32100AZB-132S/4
21	16	Legs #4	3	1000 LB	60 FPM	Variable	480Y VAC	Nord SK32100AZB-100L/4
22	17	Scrim	7.5	1750 LB	120 FPM	Variable	480Y VAC	Nord SK32100AZB-132S/4
23	18	Electric #4	3	2000 LB	30 FPM	Variable	480Y VAC	Nord SK32100AZB-100L/4
24	19	General Purpose	7.5	1750 LB	120 FPM	Variable	480Y VAC	Nord SK32100AZB-132S/4
25	20	Cyclorama	7.5	1750 LB	120 FPM	Variable	480Y VAC	Nord SK32100AZB-132S/4
26	21	SL Drapery Tab	3	1000 LB	60 FPM	Variable	480Y VAC	Nord SK32100AZB-100L/4
29	22	SR Drapery Tab	3	1000 LB	60 FPM	Variable	480Y VAC	Nord SK32100AZB-100L/4

5 EXISTING - STAGE RIGGING MOTOR RATINGS AND MODELS

SCALE: NTS

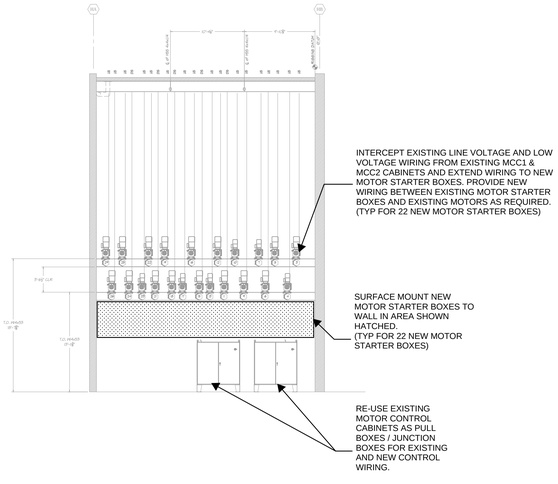

3 NEW - STAGE RIGGING MOTOR STARTER BOXES - ELEVATION VIEW

SCALE: NTS

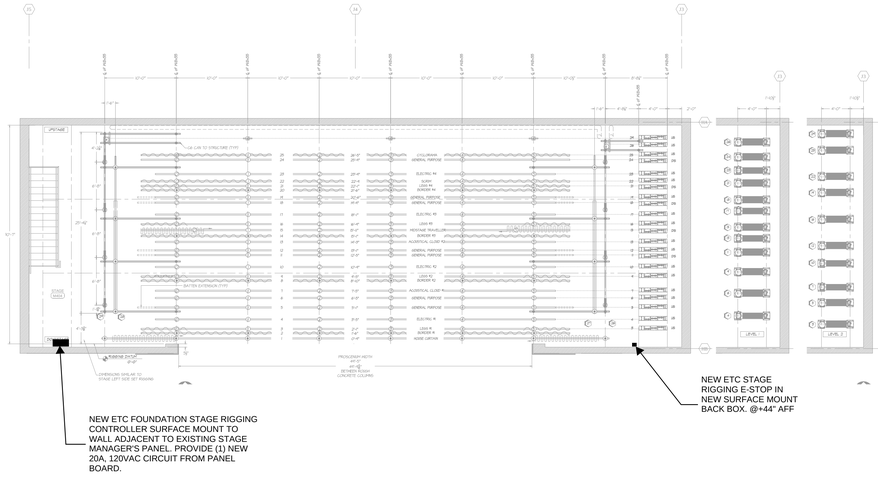

4 NEW- STAGE RIGGING CONTROLLER AND E-STOP - PLAN VIEW

SCALE: NTS

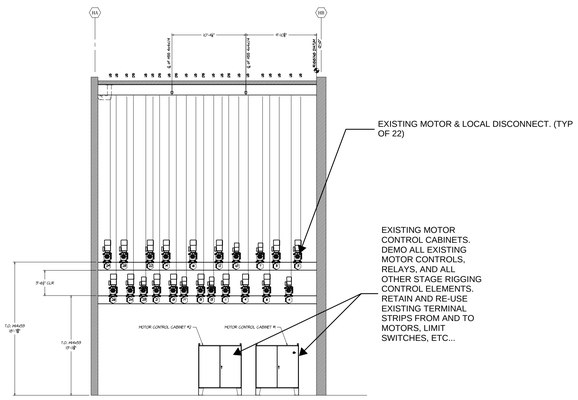

1 EXISTING - STAGE LEFT WALL ELEVATION

SCALE: NTS

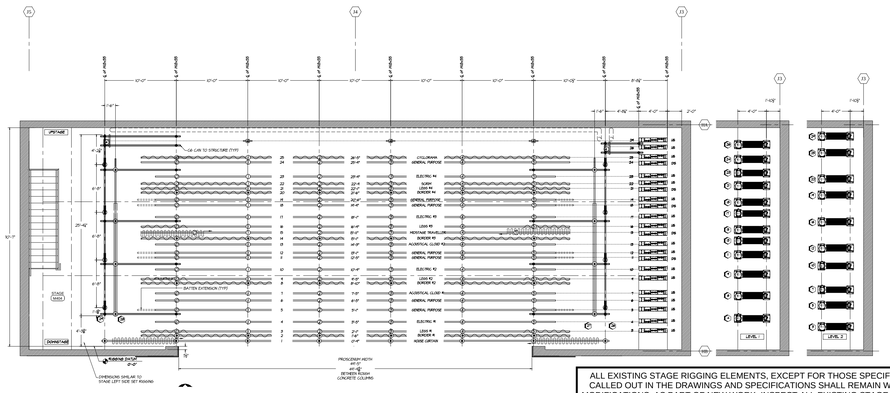

2 EXISTING - STAGE RIGGING & STAGE RIGGING MOTOR PLANS

SCALE: NTS

SHEET LIST	
SHEET NUMBER	SHEET NAME
TR2.1	EXISTING MOTOR CONTROLS INTERCONNECT DIAGRAM
TR2.2	NEW MOTOR CONTROLS INTERCONNECT DIAGRAM MOTORS #1 THRU #11
TR2.3	NEW MOTOR CONTROLS INTERCONNECT DIAGRAM MOTORS #12 THRU #22
TR1.1	STAGE RIGGING MOTOR CONTROLS PLANS & ELEVATIONS
TR3.1	EXISTING MCC WIRING SCHEMATIC REFERENCE
TR3.2	EXISTING MCC WIRING SCHEMATIC REFERENCE
TR3.3	EXISTING MCC WIRING SCHEMATIC REFERENCE

PLA DESIGNS
PERFORMANCE SPACE CONSULTANTS
PORTLAND • SEATTLE
WWW.PLADESIGNSCOM

PLA PROJECT OFFICE:

PLA PORTLAND
5285 NE ELAM YOUNG PKWY
SUITE B500
HILLSBORO, OR 97124

PH: (503) 642-2168

PLA SEATTLE
4914 55TH AVENUE SOUTH
SEATTLE, WA 98118

PH: (206) 257-2251

PROJECT NAME:

FERRIS HIGH SCHOOL - STAGE RIGGING CONTROLS UPGRADES

PROJECT ADDRESS:
3020 E. 37th Ave.
Spokane, WA 99223

DESIGNED BY: Designer
DRAWN BY: Author
CHECKED BY: Checker

REVISIONS:

#	DATE	DESCRIPTION

PROJECT NUMBER:
Project Number

PHASE:
BID DRAWINGS

ISSUE DATE:
12/02/2024

ONE INCH
AT FULL SIZE

SHEET NAME:
STAGE RIGGING MOTOR CONTROLS PLANS & ELEVATIONS

SHEET NUMBER:
TR1.1

INTERCONNECTION NOTES

1. VERIFY ALL EXISTING WIRE TYPES AND QUANTITIES IN THE FIELD, PRIOR TO EXECUTION OF DEMO/NEW WORK.
2. RE-LOCATE EXISTSING LOCAL DISCONNECT DEVICES IF REQUIRED FOR INSTALLATION OF NEW MOTOR STARTER BOXES.
3. INTERCEPT AND EXTEND EXISTING WIRING BETWEEN EXISTING MOTOR CONTROL CABINET AND NEW MOTOR STARTER BOXES AS REQUIRED. LABEL AS 'NO LONGER IN USE' & ABANDON IN PLACE, WIRING NOT UTILIZED WITH NEW MOTOR STARTER BOXES.
4. REFER TO EXISTING AS-BUILT DOCUMENTS, INCLUDED AS A SUPPLEMENT TO THE BID DOCUMENTS FOR ADDITIONAL INFORMATION REGARDING EXISTING SYSTEM COMPONENTS.

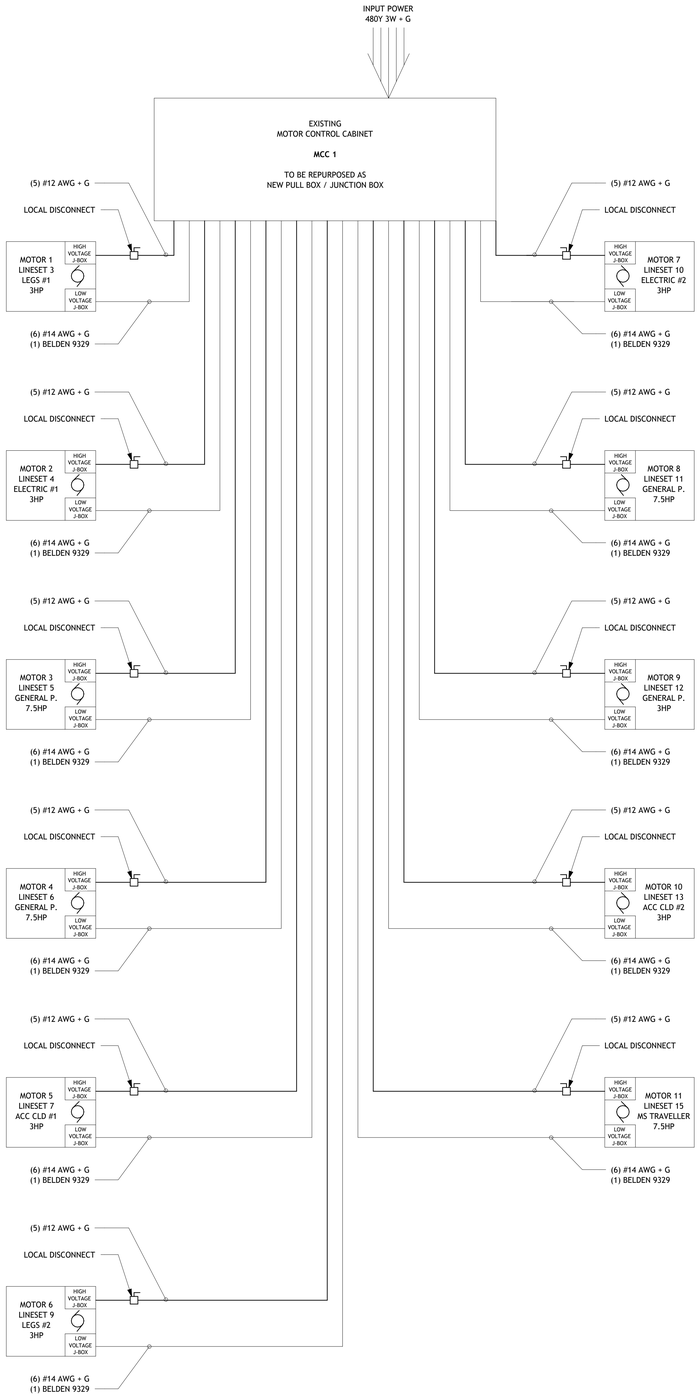

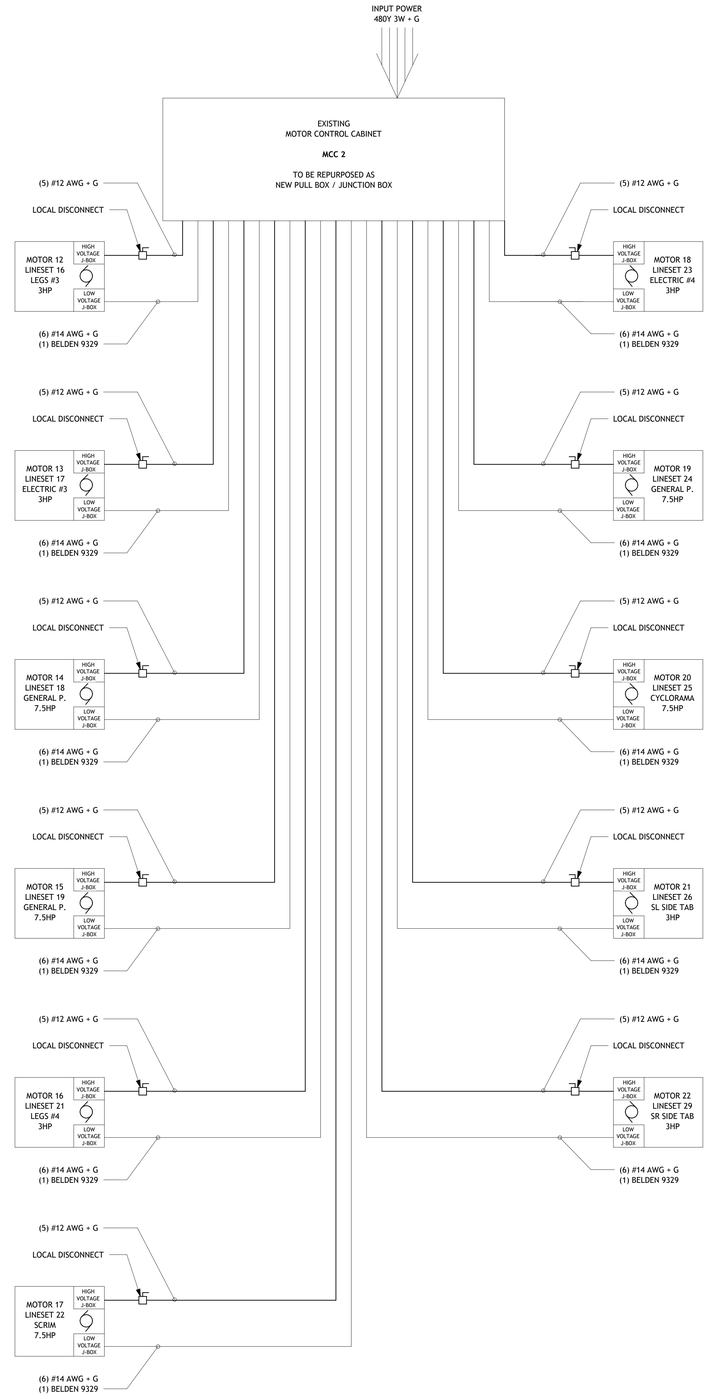

PLA DESIGNS
PERFORMANCE SPACE CONSULTANTS
PORTLAND • SEATTLE
WWW.PLADESIGNSCOM

PLA PROJECT OFFICE:

PLA PORTLAND
5285 NE ELAM YOUNG PKWY
SUITE B500
HILLSBORO, OR 97124

PH: (503) 642-2168

PLA SEATTLE
4914 55TH AVENUE SOUTH
SEATTLE, WA 98118

PH: (206) 257-2251

PROJECT NAME:

FERRIS HIGH SCHOOL - STAGE RIGGING CONTROLS UPGRADES

PROJECT ADDRESS:
3020 E. 37th Ave.
Spokane, WA 99223

DESIGNED BY: Designer
DRAWN BY: Author
CHECKED BY: Checker

REVISIONS:

#	DATE	DESCRIPTION

PROJECT NUMBER: Project Number

PHASE: BID DRAWINGS

ISSUE DATE: 12/02/2024

ONE INCH
AT FULL SIZE

SHEET NAME:
EXISTING MOTOR CONTROLS INTERCONNECT DIAGRAM

SHEET NUMBER:
TR2.1

CONTROL WIRING KEY

Ⓔ NEW BELDEN #1583A CAT5 CABLE

INTERCONNECTION NOTES

1. RIGGING CONTROL WIRING IS IDENTICAL TO COMPUTER NETWORK LAN WIRING. MAXIMUM RUN LENGTH IS 100M (300')
2. ALL CONTROL WIRING SHALL BE INSTALLED IN METALIC CONDUIT.
3. VERIFY ALL WIRE/CABLE TYPES, QUANTITIES AND INTERCONNECTION REQUIREMENTS FROM MANUFACTURER SUBMITTALS PRIOR TO CABLE ROUGH IN. INTERCEPT AND EXTEND ALL EXISTING CABLES/WIRING AS REQUIRED FOR A COMPLETE INSTALLATION.
4. ALL CONTROL CABLES FOR PORTALBE EQUIPMENT SHALL BE 25'-0" LONG UNLESS OTHERWISE NOTED.
5. REFER TO EXISTING AS-BUILT DOCUMENTS, INCLUDED AS A SUPPLEMENT TO THE BID DOCUMENTS FOR ADDITIONAL INFORMATION REGARDING EXISTING SYSTEM COMPONENTS.

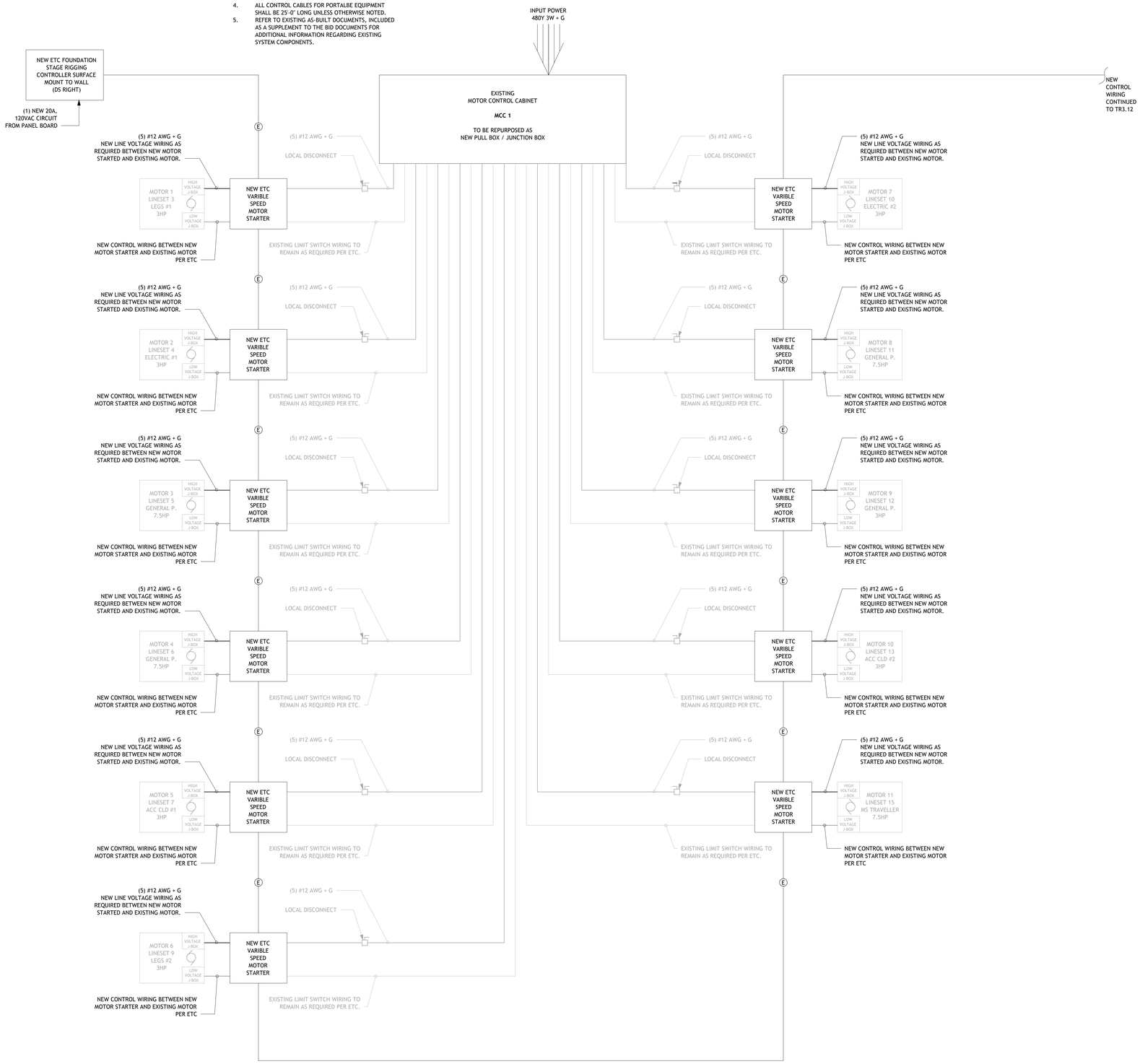

PLA DESIGNS
PERFORMANCE SPACE CONSULTANTS
PORTLAND • SEATTLE
WWW.PLADESIGNSCOM

PLA PROJECT OFFICE:

PLA PORTLAND
5285 NE ELAM YOUNG PKWY
SUITE B500
HILLSBORO, OR 97124
PH: (503) 642-2168

PLA SEATTLE
4914 55TH AVENUE SOUTH
SEATTLE, WA 98118
PH: (206) 257-2251

PROJECT NAME:

FERRIS HIGH SCHOOL - STAGE RIGGING CONTROLS UPGRADES

PROJECT ADDRESS:
3020 E. 37th Ave.
Spokane, WA 99223

DESIGNED BY: Designer
DRAWN BY: Author
CHECKED BY: Checker

REVISIONS:

	DATE	DESCRIPTION
1		

PROJECT NUMBER: Project Number

PHASE: BID DRAWINGS

ISSUE DATE: 12/02/2024

ONE INCH
AT FULL SIZE

SHEET NAME:
NEW MOTOR CONTROLS INTERCONNECT DIAGRAM MOTORS #1 THRU #11

SHEET NUMBER:
TR2.2

CONTROL WIRING KEY

(E) NEW BELDEN #1583A CAT5 CABLE

INTERCONNECTION NOTES

1. RIGGING CONTROL WIRING IS IDENTICAL TO COMPUTER NETWORK LAN WIRING. MAXIMUM RUN LENGTH IS 100M (300')
2. ALL CONTROL WIRING SHALL BE INSTALLED IN METALIC CONDUIT.
3. VERIFY ALL WIRE/CABLE TYPES, QUANTITIES AND INTERCONNECTION REQUIREMENTS FROM MANUFACTURER SUBMITTALS PRIOR TO CABLE ROUGH IN. INTERCEPT AND EXTEND ALL EXISTING CABLES/WIRING AS REQUIRED FOR A COMPLETE INSTALLATION.
4. ALL CONTROL CABLES FOR PORTALBE EQUIPMENT SHALL BE 25'-0" LONG UNLESS OTHERWISE NOTED.
5. REFER TO EXISTING AS-BUILT DOCUMENTS, INCLUDED AS A SUPPLEMENT TO THE BID DOCUMENTS FOR ADDITIONAL INFORMATION REGARDING EXISTING SYSTEM COMPONENTS.

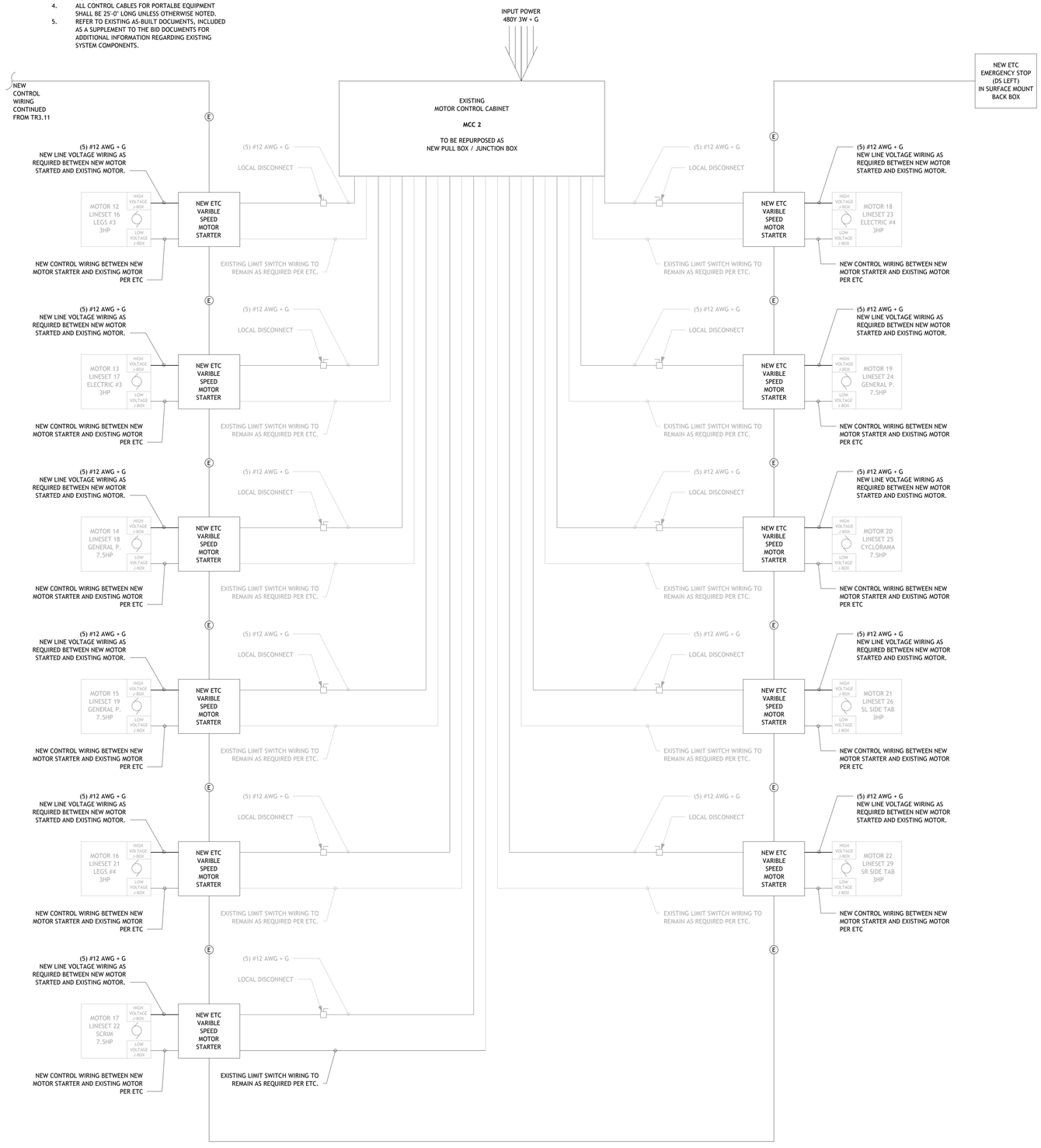

PLA DESIGNS
PERFORMANCE SPACE CONSULTANTS
PORTLAND • SEATTLE
WWW.PLADESIGNSCOM

PLA PROJECT OFFICE:

PLA PORTLAND
5285 NE ELAM YOUNG PKWY
SUITE B500
HILLSBORO, OR 97124

PH: (503) 642-2168

PLA SEATTLE
4914 55TH AVENUE SOUTH
SEATTLE, WA 98118

PH: (206) 257-2251

PROJECT NAME:

FERRIS HIGH SCHOOL - STAGE RIGGING CONTROLS UPGRADES

PROJECT ADDRESS:
3020 E. 37th Ave.
Spokane, WA 99223

DESIGNED BY:	CMO
DRAWN BY:	CMO
CHECKED BY:	MRJ

REVISIONS:

#	DATE	DESCRIPTION

PROJECT NUMBER:
Project Number

PHASE:
BID DRAWINGS

ISSUE DATE:
12/02/2024

ONE INCH
AT FULL SIZE

SHEET NAME:
NEW MOTOR CONTROLS INTERCONNECT DIAGRAM MOTORS #12 THRU #22

SHEET NUMBER:
TR2.3

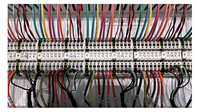

IMAGE A

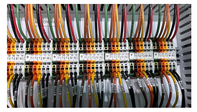

IMAGE B



IMAGE C









IMAGE D



IMAGE E



IMAGE F

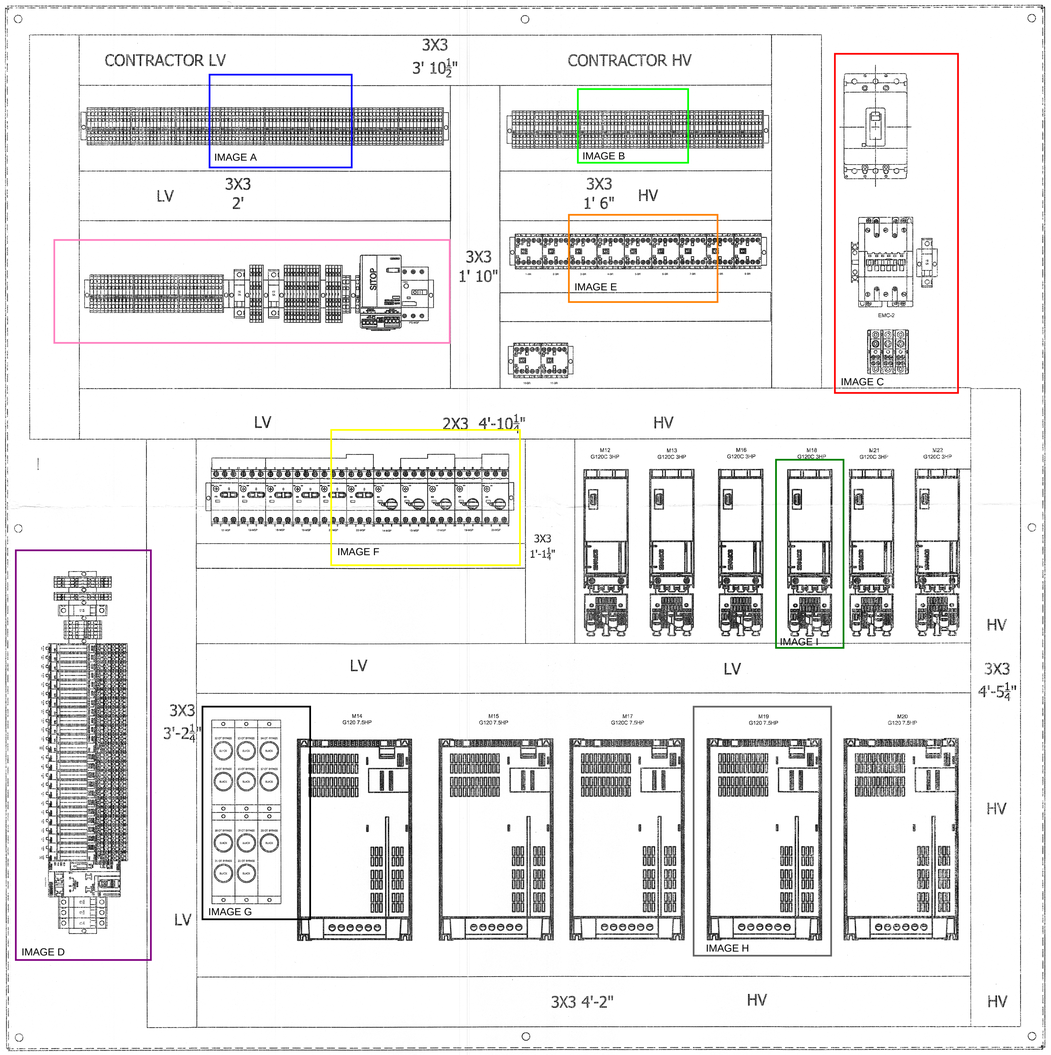

MCC PANEL 2



IMAGE G



IMAGE H



IMAGE I

THIS DRAWING IS PROVIDED FOR REFERENCE FROM EXISTING AS-BUILT DOCUMENTATION. THE CONTRACTOR SHALL CONFIRM EXISTING WIRING CONFIGURATION TO/FROM DEVICES AND MAKE ANY NECESSARY ADJUSTMENTS REQUIRED FOR A COMPLETE INSTALLATION.

PLA DESIGNS
PERFORMANCE SPACE CONSULTANTS
PORTLAND • SEATTLE
WWW.PLADESIGNSCOM

PLA PROJECT OFFICE:

PLA PORTLAND
5285 NE ELAM YOUNG PKWY
SUITE B500
HILLSBORO, OR 97124
PH: (503) 642-2168

PLA SEATTLE
4914 55TH AVENUE SOUTH
SEATTLE, WA 98118
PH: (206) 257-2251

PROJECT NAME:

FERRIS HIGH SCHOOL - STAGE RIGGING CONTROLS UPGRADES

PROJECT ADDRESS:
3020 E. 37th Ave.
Spokane, WA 99223

DESIGNED BY: Designer
DRAWN BY: Author
CHECKED BY: Checker

REVISIONS:

	DATE	DESCRIPTION

PROJECT NUMBER: Project Number

PHASE: BID DRAWINGS

ISSUE DATE: 12/02/2024

ONE INCH
AT FULL SIZE

SHEET NAME:
EXISTING MCC WIRING SCHEMATIC REFERENCE

SHEET NUMBER:
TR3.1

WIRING
SCHEMATIC KEY

DRIVE TERMINAL
REFERENCE DESIGNATOR
T1 T2 T3

VFD TERMINAL
REFERENCE DESIGNATOR
U V W PE

FACTORY WIRING

FIELD WIRING

MCC 1 TERMINAL BLOCK
REFERENCE DESIGNATOR
-

MCC 2 TERMINAL BLOCK
REFERENCE DESIGNATOR
-

VAULT TERMINAL BLOCK
REFERENCE DESIGNATOR
-

CONTROL STATION TERMINAL BLOCK
REFERENCE DESIGNATOR
-

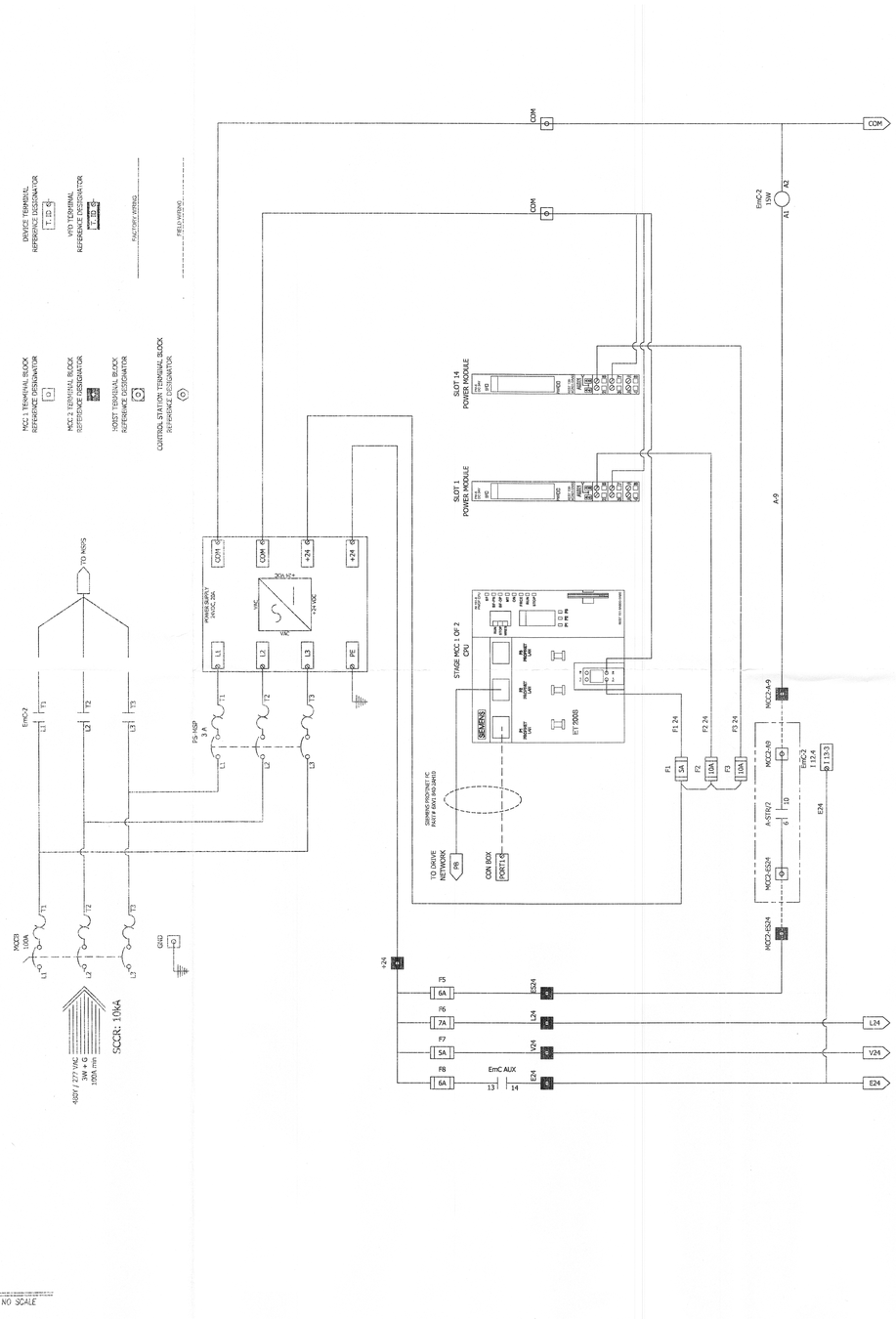

1 MCC 2 SCHEMATIC – PLC
SCALE: NO SCALE

THIS DRAWING IS PROVIDED FOR REFERENCE FROM EXISTING AS-BUILT DOCUMENTATION. THE CONTRACTOR SHALL CONFIRM EXISTING WIRING CONFIGURATION TO/FROM DEVICES AND MAKE ANY NECESSARY ADJUSTMENTS REQUIRED FOR A COMPLETE INSTALLATION.

PLA DESIGNS
PERFORMANCE SPACE CONSULTANTS
PORTLAND • SEATTLE
WWW.PLADESIGNSCOM

PLA PROJECT OFFICE:

PLA PORTLAND
5285 NE ELAM YOUNG PKWY
SUITE B500
HILLSBORO, OR 97124

PH: (503) 642-2168

PLA SEATTLE
4914 55TH AVENUE SOUTH
SEATTLE, WA 98118

PH: (206) 257-2251

PROJECT NAME:

FERRIS HIGH SCHOOL - STAGE RIGGING CONTROLS UPGRADES

PROJECT ADDRESS:
3020 E. 37th Ave.
Spokane, WA 99223

DESIGNED BY: Designer
DRAWN BY: Author
CHECKED BY: Checker

REVISIONS:

	DATE	DESCRIPTION

PROJECT NUMBER:
Project Number

PHASE:
BID DRAWINGS

ISSUE DATE:
12/02/2024

ONE INCH
AT FULL SIZE

SHEET NAME:
EXISTING MCC WIRING SCHEMATIC REFERENCE

SHEET NUMBER:
TR3.2

PLA PROJECT OFFICE:
PLA PORTLAND
5285 NE ELAM YOUNG PKWY
SUITE 200
HILLSBORO, OR 97124
PH: (503) 642-2168

PLA SEATTLE
4914 55TH AVENUE SOUTH
SEATTLE, WA 98118
PH: (206) 257-2251

PROJECT NAME:

FERRIS HIGH SCHOOL - STAGE RIGGING CONTROLS UPGRADES

PROJECT ADDRESS:
3020 E. 37th Ave
Spokane, WA 99223

DESIGNED BY: Designer
DRAWN BY: Author
CHECKED BY: Checker

REVISIONS:

	DATE	DESCRIPTION
1		
2		
3		
4		

PROJECT NUMBER: Project Number

PHASE: BID DRAWINGS

ISSUE DATE: 12/02/2024

ONE INCH AT FULL SIZE

SHEET NAME: EXISTING MCC WIRING SCHEMATIC REFERENCE

SHEET NUMBER: TR3.3

TYPICAL MOTOR TERMINATIONS - MCC 2

LINESET	MOTOR	MSP				VARIABLE FREQUENCY DRIVE		BRAKE RELAY		MOTOR TERMINALS	OT BYPASS BUTTON		LIMIT /SLACK LINE SWITCH TERMINALS						PLC INPUTS					PLC COUNTERS			
DEVICE	SETTING	AUX WIRE	DEVICE	HP	RESISTOR	DEVIC E	WIRE				DEVICE	WIRE	+24	UOT	OT	UPLIM	DNLIM	RESET	T LIM_UOUT_O	LIM_OUT	LIM_IN	MSP	COM	+24VDC	COM	A	B	RESET
16	12-MSP	7.4	12-G120C	3	200W1602	12-6A	12-18			12-T1 12-T2 12-T3 12-BZ	12-O1	12-11	12-11	12-11	12-11	12-14	12-15	12-16	12-17	12-S (I 12.1)	12-S (I 12.2)	12-6 (I 12.3)							
17	13-MSP	7.4	13-G120C	3	200W1602	13-6A	13-18			13-T1 13-T2 13-T3 13-B1	13-O1	13-11	13-11	13-11	13-11	13-14	13-15	13-16	13-17	13-4 (I 13.1)	13-4 (I 13.2)	13-6 (I 13.3)							
18	14-MSP	18	14-G120C	7.5		14-6A	14-18			14-T1 14-T2 14-T3 14-B1	14-O1	14-11	14-11	14-11	14-11	14-14	14-15	14-16	14-17	14-5 (I 14.1)	14-5 (I 14.2)	14-6 (I 14.3)							
19	15-MSP	18	15-G120C	7.5		15-6A	15-18			15-T1 15-T2 15-T3 15-B1	15-O1	15-11	15-11	15-11	15-11	15-14	15-15	15-16	15-17	16-2 (I 15.1)	16-2 (I 15.2)	16-6 (I 15.3)							
21	16-MSP	7.4	16-G120C	3	200W1602	16-6A	16-18			16-T1 16-T2 16-T3 16-B1	16-O1	16-11	16-11	16-11	16-11	16-14	16-15	16-16	16-17	17-S (I 16.1)	17-S (I 16.2)	17-6 (I 16.3)							
22	17-MSP	18	17-G120C	7.5		17-6A	17-18			17-T1 17-T2 17-T3 17-B1	17-O1	17-11	17-11	17-11	17-11	17-13	17-14	17-15	17-16	18-2 (I 17.1)	18-2 (I 17.2)	18-6 (I 17.3)							
23	18-MSP	7.4	18-G120C	3	200W1602	18-6A	18-18			18-T1 18-T2 18-T3 18-B1	18-O1	18-11	18-11	18-11	18-11	18-13	18-14	18-15	18-16	19-S (I 18.1)	19-S (I 18.2)	19-6 (I 18.3)							
24	19-MSP	18	19-G120C	7.5		19-6A	19-18			19-T1 19-T2 19-T3 19-B1	19-O1	19-11	19-11	19-11	19-11	19-13	19-14	19-15	19-16	20-2 (I 19.1)	20-2 (I 19.2)	20-6 (I 19.3)							
25	20-MSP	18	20-G120C	7.5		20-6A	20-18			20-T1 20-T2 20-T3 20-B1	20-O1	20-11	20-11	20-11	20-11	20-13	20-14	20-15	20-16	21-S (I 20.1)	21-S (I 20.2)	21-6 (I 20.3)							
26	21-MSP	7.4	21-G120C	3	200W1602	21-6A	21-18			21-T1 21-T2 21-T3 21-B1	21-O1	21-11	21-11	21-11	21-11	21-13	21-14	21-15	21-16	22-S (I 21.1)	22-S (I 21.2)	22-6 (I 21.3)							
29	22-MSP	7.4	22-G120C	3	200W1602	22-6A	22-18			22-T1 22-T2 22-T3 22-B1	22-O1	22-11	22-11	22-11	22-11	22-13	22-14	22-15	22-16	22-S (I 22.1)	22-S (I 22.2)	22-6 (I 22.3)							
30	23-MSP	7.4	23-G120C	3	200W1602	23-6A	23-18			23-T1 23-T2 23-T3 23-B1	23-O1	23-11	23-11	23-11	23-11	23-13	23-14	23-15	23-16	24-S (I 23.1)	24-S (I 23.2)	24-6 (I 23.3)							
31	24-MSP	7.4	24-G120C	3	200W1602	24-6A	24-18			24-T1 24-T2 24-T3 24-B1	24-O1	24-11	24-11	24-11	24-11	24-13	24-14	24-15	24-16	25-S (I 24.1)	25-S (I 24.2)	25-6 (I 24.3)							
32	25-MSP	7.4	25-G120C	3	200W1602	25-6A	25-18			25-T1 25-T2 25-T3 25-B1	25-O1	25-11	25-11	25-11	25-11	25-13	25-14	25-15	25-16	26-S (I 25.1)	26-S (I 25.2)	26-6 (I 25.3)							
33	26-MSP	7.4	26-G120C	3	200W1602	26-6A	26-18			26-T1 26-T2 26-T3 26-B1	26-O1	26-11	26-11	26-11	26-11	26-13	26-14	26-15	26-16	27-S (I 26.1)	27-S (I 26.2)	27-6 (I 26.3)							
34	27-MSP	7.4	27-G120C	3	200W1602	27-6A	27-18			27-T1 27-T2 27-T3 27-B1	27-O1	27-11	27-11	27-11	27-11	27-13	27-14	27-15	27-16	28-S (I 27.1)	28-S (I 27.2)	28-6 (I 27.3)							
35	28-MSP	7.4	28-G120C	3	200W1602	28-6A	28-18			28-T1 28-T2 28-T3 28-B1	28-O1	28-11	28-11	28-11	28-11	28-13	28-14	28-15	28-16	29-S (I 28.1)	29-S (I 28.2)	29-6 (I 28.3)							
36	29-MSP	7.4	29-G120C	3	200W1602	29-6A	29-18			29-T1 29-T2 29-T3 29-B1	29-O1	29-11	29-11	29-11	29-11	29-13	29-14	29-15	29-16	30-S (I 29.1)	30-S (I 29.2)	30-6 (I 29.3)							
37	30-MSP	7.4	30-G120C	3	200W1602	30-6A	30-18			30-T1 30-T2 30-T3 30-B1	30-O1	30-11	30-11	30-11	30-11	30-13	30-14	30-15	30-16	31-S (I 30.1)	31-S (I 30.2)	31-6 (I 30.3)							
38	31-MSP	7.4	31-G120C	3	200W1602	31-6A	31-18			31-T1 31-T2 31-T3 31-B1	31-O1	31-11	31-11	31-11	31-11	31-13	31-14	31-15	31-16	32-S (I 31.1)	32-S (I 31.2)	32-6 (I 31.3)							
39	32-MSP	7.4	32-G120C	3	200W1602	32-6A	32-18			32-T1 32-T2 32-T3 32-B1	32-O1	32-11	32-11	32-11	32-11	32-13	32-14	32-15	32-16	33-S (I 32.1)	33-S (I 32.2)	33-6 (I 32.3)							
40	33-MSP	7.4	33-G120C	3	200W1602	33-6A	33-18			33-T1 33-T2 33-T3 33-B1	33-O1	33-11	33-11	33-11	33-11	33-13	33-14	33-15	33-16	34-S (I 33.1)	34-S (I 33.2)	34-6 (I 33.3)							
41	34-MSP	7.4	34-G120C	3	200W1602	34-6A	34-18			34-T1 34-T2 34-T3 34-B1	34-O1	34-11	34-11	34-11	34-11	34-13	34-14	34-15	34-16	35-S (I 34.1)	35-S (I 34.2)	35-6 (I 34.3)							
42	35-MSP	7.4	35-G120C	3	200W1602	35-6A	35-18			35-T1 35-T2 35-T3 35-B1	35-O1	35-11	35-11	35-11	35-11	35-13	35-14	35-15	35-16	36-S (I 35.1)	36-S (I 35.2)	36-6 (I 35.3)							
43	36-MSP	7.4	36-G120C	3	200W1602	36-6A	36-18			36-T1 36-T2 36-T3 36-B1	36-O1	36-11	36-11	36-11	36-11	36-13	36-14	36-15	36-16	37-S (I 36.1)	37-S (I 36.2)	37-6 (I 36.3)							
44	37-MSP	7.4	37-G120C	3	200W1602	37-6A	37-18			37-T1 37-T2 37-T3 37-B1	37-O1	37-11	37-11	37-11	37-11	37-13	37-14	37-15	37-16	38-S (I 37.1)	38-S (I 37.2)	38-6 (I 37.3)							
45	38-MSP	7.4	38-G120C	3	200W1602	38-6A	38-18			38-T1 38-T2 38-T3 38-B1	38-O1	38-11	38-11	38-11	38-11	38-13	38-14	38-15	38-16	39-S (I 38.1)	39-S (I 38.2)	39-6 (I 38.3)							
46	39-MSP	7.4	39-G120C	3	200W1602	39-6A	39-18			39-T1 39-T2 39-T3 39-B1	39-O1	39-11	39-11	39-11	39-11	39-13	39-14	39-15	39-16	40-S (I 39.1)	40-S (I 39.2)	40-6 (I 39.3)							
47	40-MSP	7.4	40-G120C	3	200W1602	40-6A	40-18			40-T1 40-T2 40-T3 40-B1	40-O1	40-11	40-11	40-11	40-11	40-13	40-14	40-15	40-16	41-S (I 40.1)	41-S (I 40.2)	41-6 (I 40.3)							
48	41-MSP	7.4	41-G120C	3	200W1602	41-6A	41-18			41-T1 41-T2 41-T3 41-B1	41-O1	41-11	41-11	41-11	41-11	41-13	41-14	41-15	41-16	42-S (I 41.1)	42-S (I 41.2)	42-6 (I 41.3)							
49	42-MSP	7.4	42-G120C	3	200W1602	42-6A	42-18			42-T1 42-T2 42-T3 42-B1	42-O1	42-11	42-11	42-11	42-11	42-13	42-14	42-15	42-16	43-S (I 42.1)	43-S (I 42.2)	43-6 (I 42.3)							
50	43-MSP	7.4	43-G120C	3	200W1602	43-6A	43-18			43-T1 43-T2 43-T3 43-B1	43-O1	43-11	43-11	43-11	43-11	43-13	43-14	43-15	43-16	44-S (I 43.1)	44-S (I 43.2)	44-6 (I 43.3)							
51	44-MSP	7.4	44-G120C	3	200W1602	44-6A	44-18			44-T1 44-T2 44-T3 44-B1	44-O1	44-11	44-11	44-11	44-11	44-13	44-14	44-15	44-16	45-S (I 44.1)	45-S (I 44.2)	45-6 (I 44.3)							
52	45-MSP	7.4	45-G120C	3	200W1602	45-6A	45-18			45-T1 45-T2 45-T3 45-B1	45-O1	45-11	45-11	45-11	45-11	45-13	45-14	45-15	45-16	46-S (I 45.1)	46-S (I 45.2)	46-6 (I 45.3)							
53	46-MSP	7.4	46-G120C	3	200W1602	46-6A	46-18			46-T1 46-T2 46-T3 46-B1	46-O1	46-11	46-11	46-11	46-11	46-13	46-14	46-15	46-16	47-S (I 46.1)	47-S (I 46.2)	47-6 (I 46.3)							
54	47-MSP	7.4	47-G120C	3	200W1602	47-6A	47-18			47-T1 47-T2 47-T3 47-B1	47-O1	47-11	47-11	47-11	47-11	47-13	47-14	47-15	47-16	48-S (I 47.1)	48-S (I 47.2)	48-6 (I 47.3)							
55	48-MSP	7.4	48-G120C	3	200W1602	48-6A	48-18			48-T1 48-T2 48-T3 48-B1	48-O1	48-11	48-11	48-11	48-11	48-13	48-14	48-15	48-16	49-S (I 48.1)	49-S (I 48.2)	49-6 (I 48.3)							
56	49-MSP	7.4	49-G120C	3	200W1602	49-6A	49-18			49-T1 49-T2 49-T3 49-B1	49-O1	49-11	49-11	49-11	49-11	49-13	49-14	49-15	49-16	50-S (I 49.1)	50-S (I 49.2)	50-6 (I 49.3)							
57	50-MSP	7.4	50-G120C	3	200W1602	50-6A	50-18			50-T1 50-T2 50-T3 50-B1	50-O1	50-11	50-11	50-11	50-11	50-13	50-14	50-15	50-16	51-S (I 50.1)	51-S (I 50.2)	51-6 (I 50.3)							
58	51-MSP	7.4	51-G120C	3	200W1602	51-6A	51-18			51-T1 51-T2 51-T3 51-B1	51-O1	51-11	51-11	51-11	51-11	51-13	51-14	51-15	51-16	52-S (I 51.1)	52-S (I 51.2)	52-6 (I 51.3)							
59	52-MSP	7.4	52-G120C	3	200W1602	52-6A	52-18			52-T1 52-T2 52-T3 52-B1	52-O1	52-11	52-11	52-11	52-11	52-13	52-14	52-15	52-16	53-S (I 52.1)	53-S (I 52.2)	53-6 (I 52.3)							
60	53-MSP	7.4	53-G120C	3	200W1602	53-6A	53-18			53-T1 53-T2 53-T3 53-B1	53-O1	53-11	53-11	53-11	53-11	53-13	53-14	53-15	53-16	54-S (I 53.1)	54-S (I 53.2)	54-6 (I 53.3)							
61	54-MSP	7.4	54-G120C	3	200W1602	54-6A	54-18			54-T1 54-T2 54-T3 54-B1	54-O1	54-11	54-11	54-11	54-11	54-13	54-14	54-15	54-16	55-S (I 54.1)	55-S (I 54.2)	55-6 (I 54.3)							
62	55-MSP	7.4	55-G120C	3	200W1602	55-6A	55-18			55-T1 55-T2 55-T3 55-B1	55-O1	55-11	55-11	55-11	55-11	55-13	55-14	55-15	55-16	56-S (I 55.1)	56-S (I 55.2)	56-6 (I 55.3)							
63	56-MSP	7.4	56-G120C	3	200W1602	56-6A	56-18			56-T1 56-T2 56-T3 56-B1	56-O1	56-11	56-11	56-11	56-11	56-13	56-14	56-15	56-16	57-S (I 56.1)	57-S (I 56.2)	57-6 (I 56.3)							
64	57-MSP	7.4	57-G120C	3	200W1602	57-6A	57-18			57-T1 57-T2 57-T3 57-B1	57-O1	57-11	57-11	57-11	57-11	57-13	57-14	57-15	57-16	58-S (I 57.1)	58-S (I 57.2)	58-6 (I 57.3)							
65	58-MSP	7.4	58-G120C	3	200W1602	58-6A	58-18			58-T1 58-T2 58-T3 58-B1	58-O1	58-11	58-11	58-11	58-11	58-13	58-14	58-15	58-16	59-S (I 58.1)	59-S (I 58.2)	59-6 (I 58.3)							
66	59-MSP	7.4	59-G120C	3	200W1602	59-6A	59-18			59-T1 59-T2 59-T3 59-B1	59-O1	59-11	59-11	59-11	59-11	59-13	59-14	59-15	59-16	60-S (I 59.1)	60-S (I 59.2)	60-6 (I 59.3)							
67	60-MSP	7.4	60-G120C	3	200W1602	60-6A	60-18			60-T1 60-T2 60-T3 60-B1	60-O1	60-11	60-11	60-11	60-11	60-13	60-14	60-15	60-16	61-S (I 60.1)	61-S (I 60.2)	61-6 (I 60.3)							
68	61-MSP	7.4	61-G120C	3	200W1602	61-6A	61-18			61-T1 61-T2 61-T3 61-B1	61-O1	61-11	61-11	61-11	61-11	61-13	61-14	61-15	61-16	62-S (I 61.1)	62-S (I 61.2)	62-6 (I 61.3)							
69	62-MSP	7.4	62-G120C	3	200W1602	62-6A	62-18			62-T1 62-T2 62-T3 62-B1	62-O1	62-11	62-11	62-11	62-11	62-13	62-14	62-15	62-16	63-S (I 62.1)	63-S (I 62.2)	63-6 (I 62.3)							
70	63-MSP	7.4	63-G120C	3	200W1602	63-6A	63-18			63-T1 63-T2 63-T3 63-B1	63-O1	63-11	63-11	63-11	63-11	63-13	63-14	63-15	63-16	64-S (I 63.1)	64-S (I 63.2)	64-6 (I 63.3)							
71	64-MSP	7.4	64-G120C	3	200W1602	64-6A	64-18			64-T1 64-T2 64-T3 64-B1	64-O1	64-11	64-11	64-11	64-11	64-13	64-14	64-15	64-16	65-S (I 64.1)	65-S (I 64.2)	65-6 (I 64.3)							
72	65-MSP	7.4	65-G120C	3	200W1602	65-6A	65-18			65-T1 65-T2 65-T3 65-B1	65-O1	65-11	65-11	65-11	65-11	65-13	65-14	65-15	65-16	66-S (I 65.1)	66-S (I 65.2)	66-6 (I 65.3)							
73	66-MSP	7.4	66-G120C	3	200W1602	66-6A	66-18			66-T1 66-T2 66-T3 66-B1	66-O1	66-11	66-11	66-11	66-11	66-13	66-14	66-15	66-16	67-S (I 66.1)	67-S (I 66.2)	67-6 (I 66.3)							
74	67-MSP	7.4	67-G120C	3	200W1602	67-6A	67-18			67-T1 67-T2 67-T3 67-B1	67-O1	67-11	67-11	67-11	67-11	67-13	67-14	67-15	67-16	68-S (I 67.1)	68-S (I 67.2)	68-6 (I 67.3)							
75	68-MSP	7.4	68-G120C	3	200W1602	68-6A	68-18			68-T1 68-T2 68-T3 68-B1	68-O1	68-11	68-11	68-11	68-11	68-13	68-14	68-15	68-16	69-S (I 68.1)	69-S (I 68.2)	69-6 (I 68.3)							
76	69-MSP	7.4	69-G120C	3	200W1602	69-6A	69-18			69-T1 69-T2 69-T3 69-B1	69-O1	69-11	69-11	69-11	69-11	69-13	69-14	69-15	69-16	70-S (I 69.1)	70-S (I 69.2)	70-6 (I 69.3)							
77	70-MSP	7.4	70-G120C	3	200W1602	70-6A	70-18			70-T1 70-T2 70-T3 70-B1	70-O1	70-11	70-11	70-11	70-11	70-13	70-14	70-15	70-16	71-S (I 70.1)	71-S (I 70.2)	71-6 (I 70.3)							
78	71-MSP	7.4	71-G120C	3	200W1602	71-6A	71-18			71-T1 71-T2 71-T3 71-B1	71-O1	71-11	71-11	71-11	71-11	71-13	71-14	71-15	71-16	72-S (I 71.1)	72-S (I 71.2)	72-6 (I 71.3)							
79	72-MSP	7.4	72-G120C	3	200W1602	72-6A	72-18			72-T1 72-T2 72-T3 72-B1	72-O1	72-11	72-11	72-11	72-11	72-13	72-14	72-15	72-16	73-S (I 72.1)	73-S (I 72.2)	73-6 (I 72.3)							
80	73-MSP	7.4	73-G120C	3	200W1602	73-6A	73-18			73-T1 73-T2 73-T3 73-B1	73-O1	73-11	73-11	73-11	73-11	73-13	73-14	73-15	73-16	74-S (I 73.1)	74-S (I 73.2)	74-6 (I 73.3)							
81	74-MSP	7.4	74-G120C	3	200W1602	74-6A	74-18			74-T1 74-T2 74-T3 74-B1	74-O1	74-11	74-11	74-11	74-11	74-13	74-14	74-15	74-16	75-S (I 74.1)	75-S (I 74.2)	75-6 (I 74.3)							
82	75-MSP	7.4	75-G120C	3	200W1602	75-6A	75-18			75-T1 75-T2 75-T3 75-B1	75-O1	75-11	75-11	75-11	75-11	75-13	75-14	75-15	75-16	76-S (I 75.1)	76-S (I 75.2)	76-6 (I 75.3)							
83	76-MSP	7.4	76-G120C	3	200W1602	76-6A	76-18			76-T1 76-T2 76-T3 76-B1	76-O1	76-11	76-11	76-11	76-11	76-13	76-14	76-15	76-16	77-S (I 76.1)	77-S (I 76.2)	77-6 (I 76.3)							
84	77-MSP	7.4	77-G120C	3	200W1602	77-6A	77-18			77-T1 77-T2 77-T3 77-B1	77-O1	77-11	77-11	77-11	77-11	77-13	77-14	77-15	77-16	78-S (I 77.1)	78-S (I 77.2)	78-6 (I 77.3)							
85	78-MSP	7.4	78-G120C	3	200W1602	78-6A	78-18			78-T1 78-T2 78-T3 78-B1	78-O1	78-11	78-11	78-11	78-11	78-13	78-14	78-15	78-16	79-S (I 78.1)	79-S (I 78.2)	79-6 (I 78.3)							
86	79-MSP	7.4	79-G120C	3	200W1602	79-6A	79-18			79-T1 79-T2 79-T3 79-B1	79-O1	79-11	79-11	79-11	79-11	79-13	79-14	79-15	79-16	80-S (I 79.1)	80-S (I 79.2)	80-6 (I 79.3)							
87	80-MSP	7.4	80-G120C	3	200W1602	80-6A	80-18			80-T1 80-T2 80-T3 80-B1	80-O1	80-11	80-11	80-11	80-11	80-13	80-14	80-15	80-16	81-S (I 80.1)	81-S (I 80.2)	81-6 (I 80.3)							
88	81-MSP	7.4	81-G120C	3	200W1602	81-6A	81-18			81-T1 81-T2 81-T3 81-B1	81-O1	81-11	81-11	81-11	81-11	81-13	81-14	81-15	81-16	82-S (I 81.1)	82-S (I 81.2)	82-6 (I 81.3)							
89	82-MSP	7.4	82-G120C	3	200W1602	82-6A	82-18			82-T1 82-T2 82-T3 82-B1	82-O1	82-11	82-11	82-11	82-11	82-13	82-14	82-15	82-16	83-S (I 82.1)	83-S (I 82.2)	83-6 (I 82.3)							
90	83-MSP	7.4	83-G120C	3	200W1602	83-6A	83-18			83-T1 83-T2 83-T3 83-B1	83-O1	83-11	83-11	83-11	83-11	83-13	83-14	83-15	83-16	84-S (I 83.1)	84-S (I 83.2)	84-6 (I 83.3)							
91	84-MSP	7.4	84-G120C	3	200W1602	84-6A	84-18			84-T1 84-T2 84-T3 84-B1	84-O1	84-11	84-11	84-11	84-11	84-13	84-14	84-15	84-16	85-S (I 84.1)	85-S (I 84.2)	85-6 (I 84.3)							
92	85-MSP	7.4	85-G120C	3	200W1602	85-6A	85-18			85-T1 85-T2 85-T3 85-B1	85-O1	85-11	85-11	85-11	85-11	85-13	85-14	85-15	85-16	86-S (I 85.1)	86-S (I 85.2)	86-6 (I 85.3)							
93	86-MSP	7.4	86-G120C	3	200W1602	86-6A	86-18			86-T1 86-T2 86-T3 86-B1	86-O1	86-11	86-11	86-11	86-11	86-13	86-14	86-15	86-16	87-S (I 86.1)	87-S (I 86.2)	87-6 (I 86.3)							
94	87-MSP	7.4	87-G120C	3	200W1602	87-6A	87-18			87-T1 87-T2 87-T3 87-B1	87-O1	87-11	87-11	87-11	87-11	87-13	87-14	87-15	87-16	88-S (I 87.1)	88-S (I 87.2)	88-6 (I 87.3)							
95	88-MSP	7.4	88-G120C	3	200W1602	88-6A	88-18			88-T1 88-T2 88-T3 88-B1	88-O1	88-11	88-11	88-11	88-11	88-13	88-14	88-15	88-16	89-S (I 88.1)	89-S (I 88.2)	89-6 (I 88.3)							
96	89-MSP	7.4	89-G120C	3	200W1602	89-6A	89-18			89-T1 89-T2 89-T3 89-B1	89-O1	89-11	89-11	89-11	89-11	89-13	89-14	89-15	89-16	90-S (I 89.1)	90-S (I 89.2)	90-6 (I 89.3)							
97	90-MSP	7.4	90-G120C	3	200W1602	90-6A	90-18			90-T1 90-T2 90-T3 90-B1	90-O1	90-11	90-11	90-11	90-11	90-13	90-14	90-15	90-16	91-S (I 90.1)	91-S (I 90.2)	91-6 (I 90.3)							
98	91-MSP	7.4	91-G120C	3	200W1602	91-6A	91-18			91-T1 91-T2 91-T3 91-B1	91-O1	91-11	91-11	91-11	91-11	91-13	91-14	91-15	91-16	92-S (I 91.1)	92-S (I 91.2)	92-6 (I 91.3)							
99	92-MSP	7.4	92-G120C	3	200W1602	92-6A	92-18			92-T1 92-T2 92-T3 92-B1	92-O1	92-11	92-11	92-11	92-11	92-13	92-14	92-15	92-16	93-S (I 92.1)	93-S (I 92.2)	93-6 (I 92.3)							
100	93-MSP	7.4	93-G120C	3	200W1602	93-6A	93-18			93-T1 93-T2 93-T3 93-B1	93-O1	93-11	93-11	93-11	93-11	93-13	93-14	93-15	93-16	94-S (I 93.1)	94-S (I 93.2)	94-6 (I 93.3)							
101	94-MSP	7.4	94-G120C	3	200W1602	94-6A	94-18			94-T1 94-T2 94-T3 94-B1	94-O1	94-11	94-11	94-11	94-11	94-13	94-14	94-15	94-16	95-S (I 94.1)	95-S (I 94.2)	95-6 (I 94.3)							
102	95-MSP	7.4	95-G120C	3	200W1602	95-6A	95-18			95-T1 95-T2 95-T3 95-B1	95-O1	95-11	95-11	95-11	95-11	95-13	95-14	95-15	95-16	96-S (I 95.1)	96-S (I 95.2)	96-6 (I 95.3)							
103	96-MSP	7.4	96-G120C	3	200W1602	96-6A	96-18			96-T1 96-T2 96-T3 96-B1	96-O1	96-11	96-11	96-11	96-11	96-13	96-14	96-15	96-16	97-S (I 96.1)	97-S (I 96.2)	97-6 (I 96.3)							
104	97-MSP	7.4	97-G120C	3	200W1602	97-6A	97-18			97-T1 97-T2 97-T3 97-B1	97-O1	97-11	97-11	97-11	97-11	97-13	97-14	97-15	97-16	98-S (I 97.1)	98-S (I 97.2)	98-6 (I 97.3)							
105	98-MSP	7.4	98-G120C	3	200W1602	98-6A	98-18			98-T1 98-T2 98-T3 98-B1	98-O1	98-11	98-11	98-11	98-11	98-13	98-14	98-15	98-16	99-S (I 98.1)	99-S (I 98.2)	99-6 (I 98.3)							
106	99-MSP	7.4	99-G120C	3	200W1602	99-6A	99-18			99-T1 99-T2 99-T3 99-B1	99-O1	99-11	99-11	99-11	99-11	99-13	99-14	99-15	99-16	100-S (I 99.1)	100-S (I 99.2)	100-6 (I 99.3)							
107	100-MSP	7.4	100-G120C	3	200W1602	100-6A	100-18			100-T